© 2009 Hyperdyne Labs

HyperBlade SaberSD
In-the-Hilt Amplified Sound Module

Hyperdyne Labs, © 2006-2009
http://www.hyperdynelabs.com

Congratulations on your purchase of a HyperBlade SaberSD sound module! This kit is the ultimate saber upgrade for collectors, enthusiasts, role players, and costumers.

Your saber kit was manufactured using the highest-grade components available, please handle it with care as not to damage any of the components from static electricity. If you are not familiar with static electricity handling procedures, please refer to ESD procedures. Basic information on ESD can be found here: http://en.wikipedia.org/wiki/Electrostatic_discharge

NOTICE: There is no warranty on kits. It is your responsibility to install the board. Opened kits cannot be returned. Be careful if you use a battery source that is capable of delivering a lot of current. Contact a professional if you need assistance. Hyperdyne Labs assumes no responsibility for the misuse of this kit.

This device is protected under US patent 6,150,947.

Introduction

Our sound module is plug-and-play compatible with our LED driver unit. The sound board incorporates several "never-before" seen features that is unique to our HyperBlade system – including our ClashEffect™ feature , multi-speed vibrating ForceFeedback™ feature, auto calibrate, and user-friendly Sound Template Creation software tool. The SaberSD module uses a microSD memory card to store all of the sounds and configuration settings. The module uses standard WAV files.

Here is a pic of the SaberSD board:

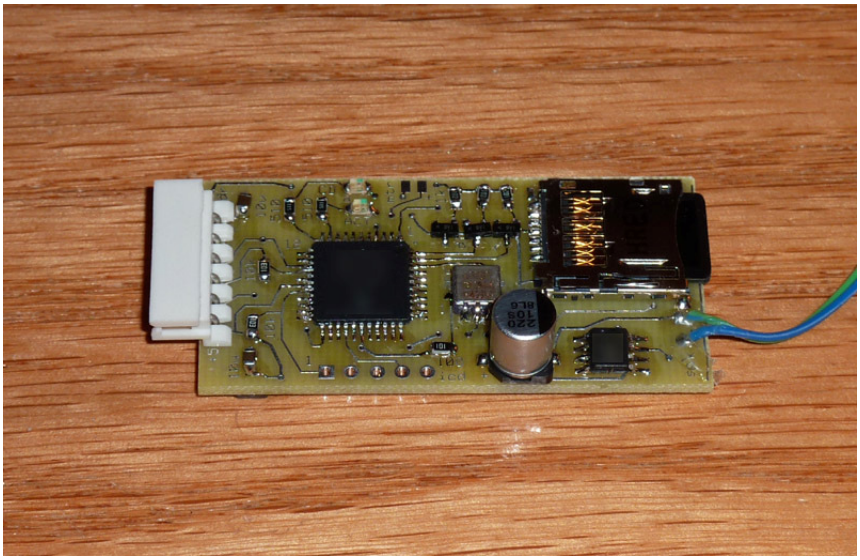

© 2009 Hyperdyne Labs

The sound module features the following advancements:

- MicroSD card holds all sounds and config settings
- Patented dual-axis accelerometer design
- 1W audio amplifier directly drives a speaker (4 – 32 ohms)
- Configurable on/off switch input for standalone use or with all types of saber drivers.
- CD quality sound playback using standard wav files
- Auto hum pitch shift based on saber orientation
- Advanced swing and clash event detection engine
- Strike/force event detection using thrust gesture
- Any sound template can be created and stored on flash card. Each template can have up to 10 ignition sounds, 10 retraction sounds, 10 deflection/lockup sounds, 20 swing clash and strike sounds.
- Sounds can be randomly selected for playback or played back in order.
- Force feedback motor synchronizes to swing and clash sound playback.
- Programmable motor speed for different events.
- Users can create their own sound templates using our free software tool.

Connection to Hyberblade LED Driver Unit

To connect your sound board to a Hyperblade LED driver unit, simply connect the grey 6-pin cable from the driver unit to the header on the sound board. The connector is keyed so it only goes in one way.

That is it!

The sound board receives power and signals from this cable, so you don't need to make any other connections.

NOTE: If you have an older driver with a 4-pin connector, the sound board will also work with this connector. Just make sure you plug the connector into the top left of the board, flush with the first pin labeled "**hdr**". The pic below shows this.

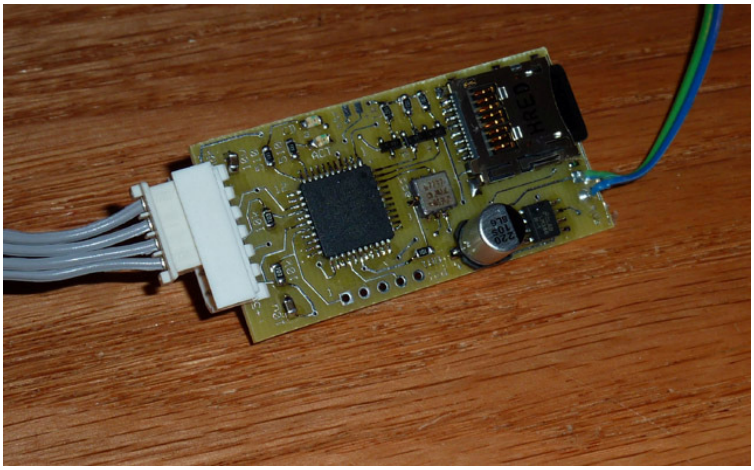

© 2009 Hyperdyne Labs

Sound Board Features

The SaberSD sound board includes several novel features – including our ClashEffect output to the driver board (to synchronize clash sound and blade flicker), configurable sound templates using standard WAV sound files, a microSD card that can be changed using a PC reader, a ForceFeedback multi-speed vib motor, and programmable settings to customize your saber behavior and sound schemes.

The microSD card is a normal FAT file system (either FAT16 or FAT32 can be used). To create a sound template, you can use our free *Sound Template Creator* software tool or copy WAV files to your card under file manager. There is also a .txt file that holds all the settings for the sound board. This is gone over in detail later in this document.

SaberSD Sound Board Peripherals

The sound board has up to 6 connections for power, ground, on/off input, clash output, deflection (aux) in, and 5V out (used to connect the switches to). If you are using our LED driver, no other information is needed as the 2 boards are plug and play. If you are using a different blade circuit or the sound board is used standalone, you can connect up your power and on/off switch mechanism to use the sound board in conjunction with your 3rd party saber.

The board can accept DC power up to 14V. Normal AA batts, li-ion cells, li-poly packs, or NiMh battery packs can be used with the sound module.

The on/off switch can be either momentary or latching. The operation of this switch is setup in the configuration file on the SD card (described below).

Here is a picture of the sound module with annotations:

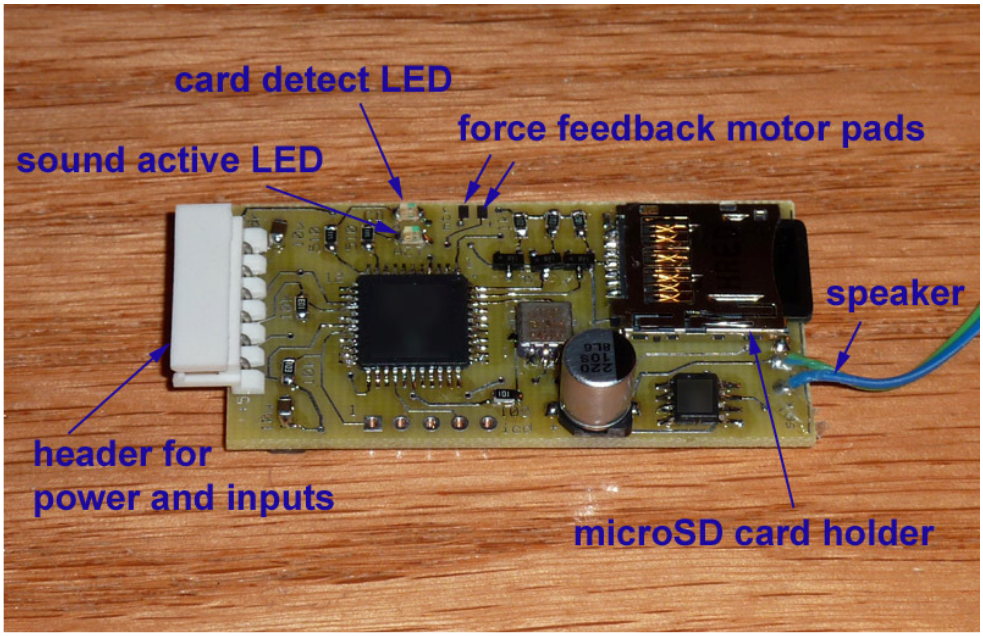

© 2009 Hyperdyne Labs

When the board is powered on, the card detect LED will blink until a SD card is inserted.

NOTE: Insert the microSD card with the gold fingers facing upwards! It can only go in one way.

When the card is detected, the CD LED will stop flashing and illuminate. This means the board is initialized and ready. If a boot sound is configured to play out, it will playback at this point.

The sound active LED illuminates once the sound module input is triggered. This means the board is actively playing out sounds and monitoring the accelerometer.

The force feedback pads are used to attach a vibration motor. The board will control the motor and synchronize it will clash and swing sound playback. You can use any type pager/vibration motor with your sound board (motor operating voltages: 1.5-12V)*.

FILE SYSTEM FOR SD CARD

The SD card used is a standard microSD card. Any size card can be used, and the smaller 1-2Gb cards are less expensive to find.

When you get your card, it should be formatted already. If not it can be formatted under Windows File manager. A normal FAT type file system can be used.

The sound files stored on the card are standard WAV formatted mono sound files. The sample rate, channel size, and bit length are auto detected for you, so you do not need to edit your sound files into any kind of proprietary format. For simplicity the audio format should follow the hum sound file format. We will be using a sample rate = 22050 Hz and bit length = 8. You can use any standard sample rate for your files (8kHz, 11.025kHz, 22.050kHz, 44kHz). We have found that for saber type sounds a sample rate of 22kHz is more than sufficient.

The SD card will be a normal removable drive under Windows. With the card in a card reader, you can copy your sound files into the root directory of the SD card.

NOTE: The files must adhere to our naming convention in order to operate properly.

<u>Here is a list of files that the sound board will auto detect:</u>

on<xx>.wav – Ignition sounds, you can store up to 10 sounds. <xx> are numbers 1-10
off<xx>.wav – Retraction sounds, you can store up to 10 sounds. <xx> are numbers 1-10
swing<xx>.wav – Swing sounds, you can store up to 20 sounds. <xx> are numbers 1-20
clash<xx>.wav – Clash sounds, you can store up to 20 sounds. <xx> are numbers 1-20

force<xx>.wav – Strike/force sounds, you can store up to 20 sounds.
deflect<xx>.wav – Deflection/lockup sounds, you can store up to 10 sounds.

startup.wav – Optional start up playback sound upon boot up.
mode.txt – File holding all configuration parameters.

As an example, let's say you wanted 2 ignition sounds, 2 retraction sounds, 3 swing sounds, 1 clash sound, 1 force sound, 2 deflection sounds. In the root microSD directory would be the files:

```
on1.wav
on2.wav
off1.wav
off2.wav
swing1.wav
swing2.wav
swing3.wav
force1.wav
deflect1.wav
deflect2.wav
mode.txt
```

CONFIGURATION FILE FORMAT

The different settings for the sound module are stored in a text file named "**mode.txt**" on the SD card in the root directory.

This file holds all settings that the user can tweak to customize their saber behavior. If the file is not found the sound board will set these parameters to known defaults. The file can be readily created and edited using Notepad or Write in Windows or any standard text editor program.

Here is an example list of the current parameters defined in the config file "mode.txt".

```
numon=1;
numoff=1;
numswing=10;
numclash=11;
numforce=3;
humsens=990;
humgain=3;
accelmid=0;
xsens=500;
ysens=500;
clashthresh=400;
swingthresh=150;
forcethresh=500;
forceangle=10;
randon=0;
randswing=0;
randclash=0;
randoff=0;
randforce=0;
usemomentary=1;
playstartupsnd=0;
calibrate=0;
vibwhilehum=0;
vibswinginten=10;
vibclashinten=20;
vibenabled=1;
```

```
vibhuminten=4;
viboninten=15;
clashondeflect=1;
```

When you want to change any of the parameters, edit the file and change the corresponding line. Also make sure the line ends with a ";" All the values for the parameters have been mapped to integer numbers (no fractions). This was designed for simplicity so the user doesnt have to remember different number formats for parameter values.

LIST OF SD CARD SETTINGS

Each parameter that the user can change in the mode.txt config file is described next.

numon – Number of on sounds to use, make sure this number matches up with the number of ignition wav files you have on the SD card. Valid number range: 1-10

numoff – Number of off sounds to use, make sure this number matches up with the number of retraction wav files you have on the SD card. Valid number range: 1-10

numswing – Number of swing sounds to use, make sure this number matches up with the number of swing wav files you have on the SD card. Valid number range: 1-20

numclash - Number of clash sounds to use, make sure this number matches up with the number of clash wav files you have on the SD card. Valid number range: 1-20

numforce – Number of strike sounds to use, make sure this number matches up with the number of strike wav files you have on the SD card. Valid number range: 1-20

numdeflect – Number of deflection/lockup sounds to use, make sure this number matches up with the number of deflection wav files you have on the SD card. Valid number range: 1-10

humsens – Sensitivity of the auto hum pitch shift. A larger number results in a slower temporal change of pitch based on the saber orientation. Smaller numbers results in a faster reaction of hum pitch when the saber orientation changes. When the saber is held up the hum pitch increases, when the saber is held down the hum pitch decreases. Valid number range: 1-999 (Default = 990)

humgain – Gain of the hum pitch shift. A larger gain value results in a wider pitch range, smaller gain results in lower pitch range. Valid number range: 1-4 (Default = 1)

accelmid – Midpoint value used for the accelerometer. Valid number range: 0-500 (Default=0)

© 2009 Hyperdyne Labs

xsens – Sensitivity of the accelerometer x-axis (strike events). A larger number results in a less sensitive response to forward-backward motion. Smaller numbers make the saber much more responsive to even the smallest changes. Valid number range: 1-999 (Default = 500)

ysens – Sensitivity of the accelerometer y-axis. A larger number results in a less sensitive response to side-to-side motion. Smaller numbers make the saber much more responsive to even the smallest changes. Valid number range: 1-999 (Default = 500)

clashthresh – Threshold to trigger a clash sound based on motion. Higher numbers result in more pronounced (in magnitude) event needed to trigger a clash sound. Valid number range: 1-999 (Default = 400)

swingthresh – Threshold to trigger a swing sound based on y-axis. Higher numbers result in more pronounced event needed to trigger a swing sound. Valid number range: 1-999 (Default = 150)

forcethresh – Threshold to trigger a strike/force sound based on x-axis motion. Higher numbers result in more pronounced event needed to trigger a strike sound. Valid number range: 1-999 (Default = 500)

forceangle – Angular threshold (in degrees) to trigger a strike/force sound. This is used in conjunction with the forcethresh parameter. If the forcethresh number is satisfied at any time and the saber was thrust forward/backward with an angle less than forceangle (with respect to the y-axis), a strike/force sound is triggered. Valid number range: 0-90 (Default = 10)

randon – Boolean to select random ignition sounds to play out everytime saber is powered on. 1 = randomize ignition sounds, 0 = play ignition sounds in numeric order (Default = 1)

randswing – Boolean to select random swing sounds to play out everytime a swing event is detected. 1 = randomize swing sounds, 0 = play swings sounds in numeric order (Default = 1)

randclash – Boolean to select random clash sounds to play out everytime a clash event is detected. 1 = randomize clash sounds, 0 = play clash sounds in numeric order (Default = 1)

randoff – Boolean to select random retraction sounds to play out everytime saber is powered off. 1 = randomize retraction sounds, 0 = play retraction sounds in numeric order (Default = 1)

randforce – Boolean to select random strike sounds to play out every time a strike event is detected. 1 = randomize strike sounds, 0 = play strike sounds in numeric order (Default = 1)

© 2009 Hyperdyne Labs

randdeflect – Boolean to select random deflection sounds to play out every time the deflection (aux) input button is held down. 1 = randomize deflection sounds, 0 = play deflection sounds in numeric order (Default = 1)

usemomentary – Boolean to set the on/off button type. 1 = button is momentary (default when using our ver 2 blade driver board), 0 = latching button (used standalone or with separate blade circuit). (Default = 1)

playstartupsnd – Boolean to set whether the startup sound is played out when the board is powered up. If set to 1, the file "startup.wav" must be present on the SD card. 1 = play startup sound, 0 = do not play start up sound (Default = 0)

vibenabled – Boolean to enable force feedback vibration motor. Set to 1 to turn on vibration functionality. Set to 0 to disable the vib motor (Default=0).

vibwhilehum – Boolean to enable a steady vibration effect when the saber hum sound is actively playing out. Set to 1 to turn on hum vibration functionality. Set to 0 to disable the vib motor during hum. Setting this to 0 helps prolong battery life as the motor is not active during constant hum periods, but will still work for swings and clashes (Default=0).

vibswinginten – Intensity of the vibration effect when a swing event is detected. Larger numbers indicate a stronger vibration effect.*** Valid number range: 0-64 (Default: 18).

vibclashinten – Intensity of the vibration effect when a clash event is detected. Larger numbers indicate a stronger vibration effect.*** Valid number range: 0-64 (Default: 32).

vibhuminten – Intensity of the vibration effect when the hum sound is active. Only effective when vibwhilehum=1. Larger numbers indicate a stronger vibration effect.*** Valid number range: 0-64 (Default: 7).

viboninten – Intensity of the vibration effect when the saber is turned on or off. Larger numbers indicate a stronger vibration effect.*** Valid number range: 0-64 (Default: 25).

.

*** NOTE: **Use with caution if you are using a low-voltage vibration motor, as large values can cause the motor to overheat or burn out**.

Before enabling the vibration functionality, you should compute the best settings using the following formula. The maximum you should set any of the vibration parameters is given by:

Max setting = 64*(vib motor max voltage / Battery voltage)

Make sure you set these values first or you risk damaging your vib motor.

Example: If you are using a 3V vib motor with the sound board and a 12V battery, the max setting you should not go exceed for any of the vibration parameters is:
64*(3/12) = **16**

If you are using a 12V battery and 12V vibration motor, the max setting is **64**.

If you are using a 7.4V battery and you are using a 5V vib motor, the max setting is:
64*(5/7.4) = **43**.

calibrate – Boolean to set whether the calibrate routine is run on powerup. If set to 1, the sound board will go through a calibration routine to help you tune your swing and clash thresholds for your particular swing style. After you are done calibrating, set this flag back to 0 for normal operation (Default = 0).

clashondeflect - Boolean to set whether the clash blade "scintillation" effect is enabled during a deflection sound playback. Set to 1 to enable the clash effect as long as the deflection button is active, 0 disables the clash blade effect during deflection sounds. (Default = 1).

SABER CALIBRATION ROUTINE

The SaberSD sound module includes a built-in novel calibration routine to help you determine the optimal threshold settings for your particular saber setup and swing behavior you want to emulate.

The calibration routine is enabled when you set the calibrate=1 in the *mode.txt* file. When you do this and subsequently power up the sound board, a special mode is entered. You will also need a special set of wav files that will guide you through the calibration process.

TIP: We have included an example set of these calibration sound files, which are available from our website and documentation CD.

You can use our example calibrate sound template and copy it to your SD card (in the root directory). Upon powering up the sound board you will be greeted by Microsoft Mary, who will guide you through the swing and clash threshold setup with voice prompts and beeping alerts.

When you are asked to point the saber down, remember the proper orientation of the saber sound board should be followed. When the SD card is closest to the floor, the saber is considered to be up (blade towards the sky). When the board header is closest to the floor, the saber is considered to be pointed down (blade towards the floor).

The picture below shows the board orientation. If you did not install the sound board with this orientation, then up and down may be reversed.

© 2009 Hyperdyne Labs

BOARD ORIENTATION

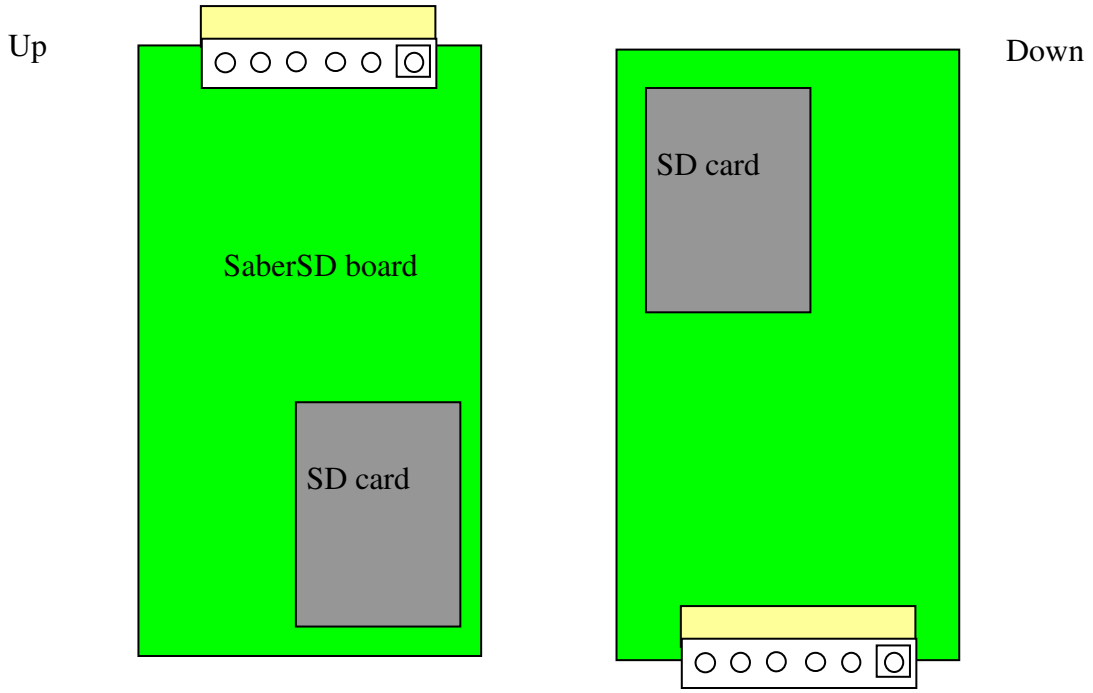

After the sound board determines your swing and clash thresholds, it will report them to you vocally. You can edit your *mode.txt* file and put these values in the respective threshold variables. You can then set calibrate = 0 in the mode.txt file and then copy the sound template you wish to use back onto your SD card.

TIP: You can have both the calibration wav files and your desired sound template on the SD card at the same time if you like, as they will not interfere with one another. Having both sets on the card at any given time allows you to calibrate the saber whenever you wish by simply editing the mode.txt file.

Fundamentals of SaberSD Motion Analysis

<u>Swing and clash event detection</u>

Swing and clash events are mainly detected using side-to-side motion analysis. When the board detects a change in the y-axis meeting the swing threshold, a swing sound is triggered. When the board detects a larger change meeting the clash threshold, a clash sound is played out. For the board to work correctly using this assumption, you want to always make the clash threshold larger than the swing threshold.

The SaberSD board uses complex signal processing to determine the rate of change of each swing event. This provides a more realistic playback tempo for each sound.

© 2009 Hyperdyne Labs

Strike event detection

Strike/force event are detected using up/down or forward/backward motion with little to no side-to-side motion. The board continuously analyzes motion for this particular gesture before triggering a strike sound. The ***forceangle*** parameter determines how strict the motion path must be. Increasing this parameter will allow a more lenient gesture to trigger the strike event, but increasing it too much will result in false triggering of strike events.

Hum auto pitch shift

To replicate a more "living" saber, the hum sound is automatically pitch shifted up and down based on the saber orientation. With the saber pointed up, the hum sound increases in pitch. With the saber parallel with the floor, the hum sound is "neutral". With the saber pointing down, the pitch decreases into a more menacing hum sound. The ***humsens*** and ***humgain*** parameters determine the temporal sensitivity and maximum pitch range for the hum algorithm.

Onboard Audio Amplifier

The SaberSD sound module includes a built-in amplifier to drive an 8-32Ω speaker.

There is a volume potentiometer on the backside of the sound board that allows the user to dial in their desired sound volume. NOTE: The gain of the amplifier is quite high (42dB), so you may not have to turn the volume up much to achieve loud sounds (this will depend on the type of speaker used).

Back of board

TIP: Turn the tiny Vol control tuning screw to increase/decrease the volume of the output sounds. The volume potentiometer will stop at its extreme turns. You can use a small jewelers screwdriver to turn the pot. You want to tune it so the sounds are loud but not too loud so they distort.

© 2009 Hyperdyne Labs

Switch Hookup for Standalone Mode

If you are using the sound module in standalone mode (w/o our Hyperblade LED blade driver), then you have to connect up the switches for on/off, power wires, and the aux (deflection) input. Below is a picture showing the pinout of the SaberSD header:

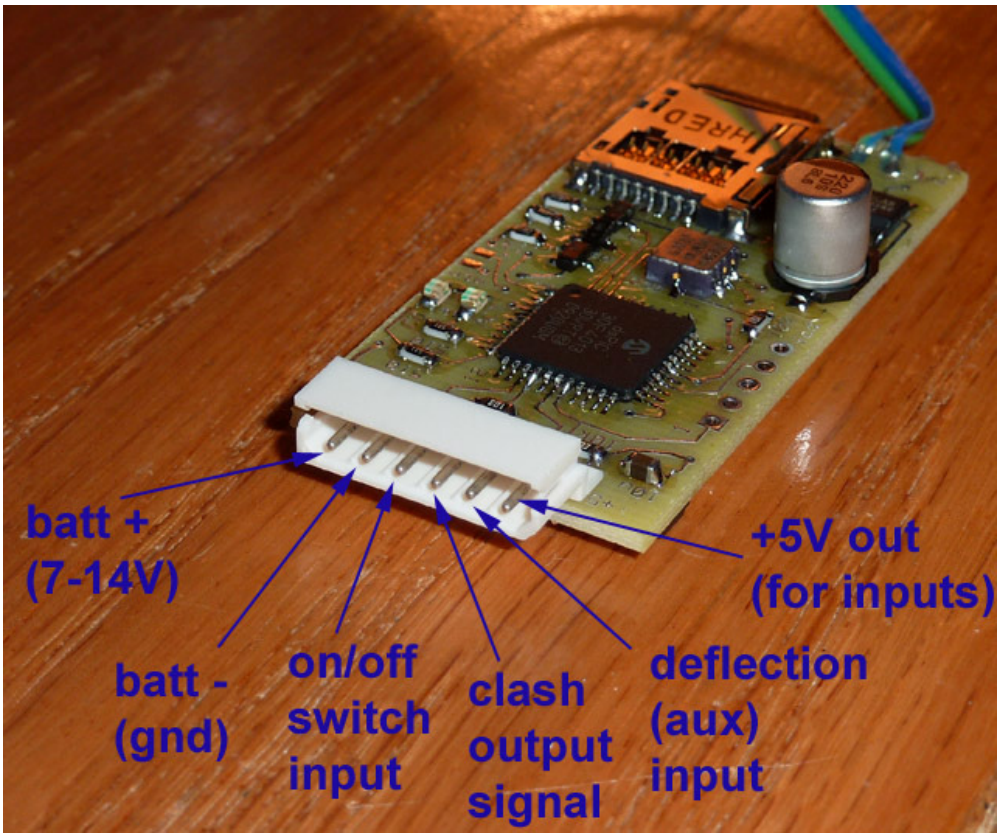

The on/off switch is used to ignite and retract the saber. Depending on the switch mode, the first press turns the saber on, the next press turns it off. For latching mode, the saber stays on as long as the switch is on.

For the deflection switch (either a pushbutton or latching switch can be used), a deflection sound is played for as long as the switch is pressed or active. The sound board will automatically cycle through all deflection sounds, one after another, while the button is active.

© 2009 Hyperdyne Labs

Here is a diagram showing how to connect up your switch inputs using the header pins (the header cable is also available from us to simplify hookup).

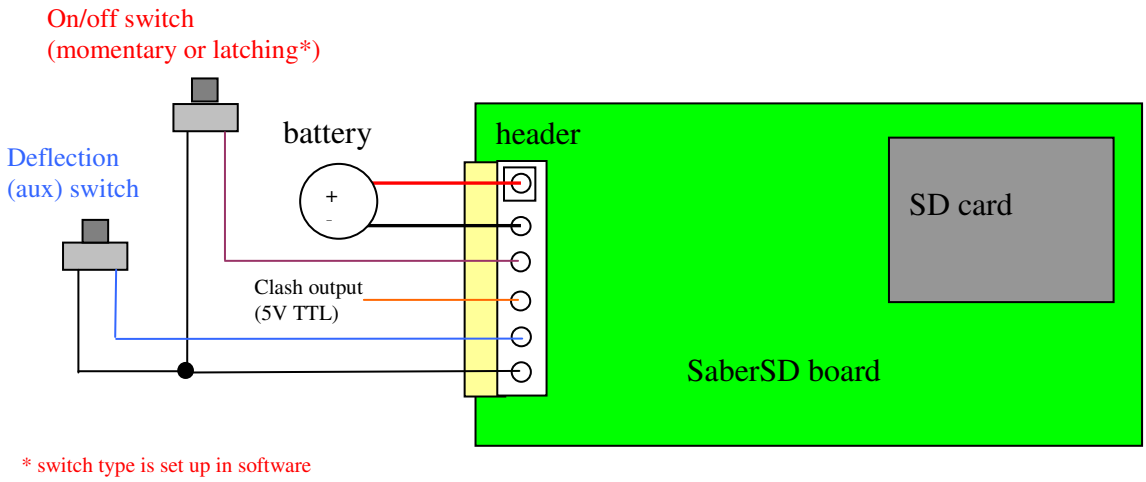

Connecting a force-feedback vibration motor (OPTIONAL)

If you wish to use a vibration motor with your sound board, you can easily connect one to the board. The 2 pads near the middle edge of the board have a "mtr" label next to them. You can connect your motor wires to these pads (polarity doesn't matter). Do not try and install your own motor if you are not comfortable soldering small parts!!

Here is a picture demonstrating the hookup

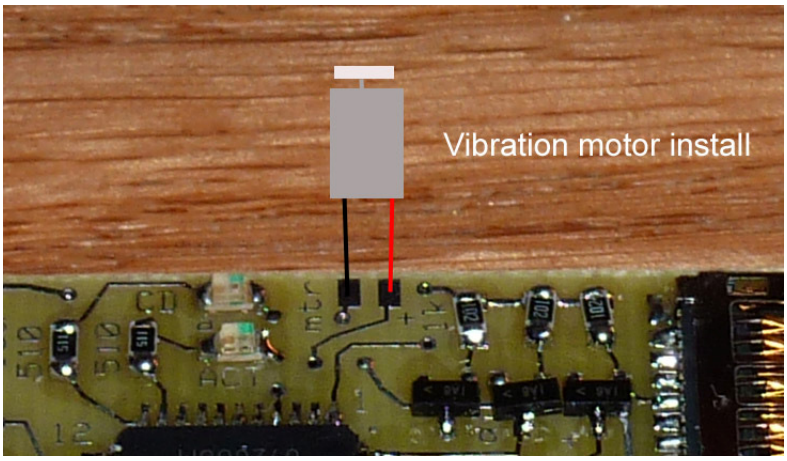

NOTE: To avoid damage if you are using a small 1.5-3V vib motor, be sure to read the above section regarding the proper settings for the different vibration effects.

© 2009 Hyperdyne Labs

Protecting your board inside the hilt

NOTE: It is imperative that during installation you do not allow the board to come into contact with other metal parts. Doing so can cause irreparable damage to the electronics.

There are several ways to securely install the sound board.

The easiest method is to protect the board with commercial heat shrink wrap (1.2-1.5" diameter PVC or other). Simply slide the heatshrink tubing over your board. Take a heat gun (or hairdryer on "high") and evenly heat the tubing. It will constrict around the board making a seal. Heat both sides until the tubing is tight. Do not heat it for more than 1 minute. Once the tubing has shrunk to its new size heating it further will not shrink it more. This will protect the components from incidental contact with a metal hilt interior.

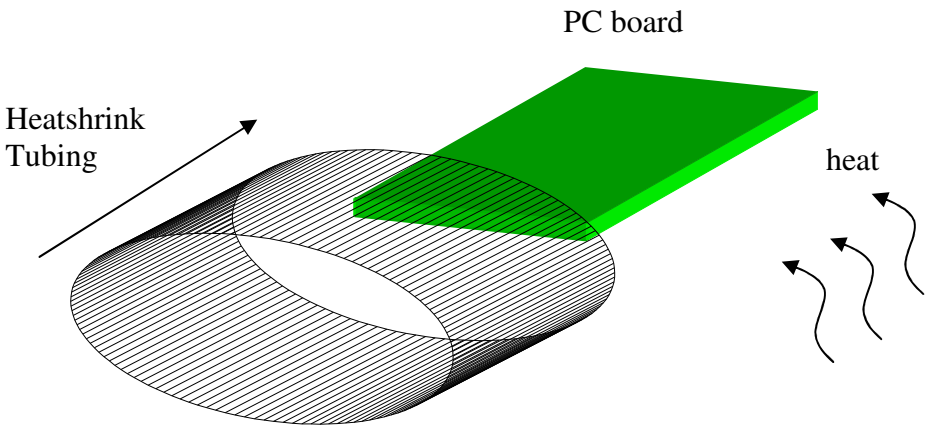

TIP: Once the heatshrinking is done, you can take a sharp exacto knife and cut small access flaps for things like the volume pot.

Another method is to mount the board with a tape or other non conductive material between the board and the hilt inside. This protects the board and also allows air to move across the board and cool it when it is inside a hilt.

Also try and mount the board near a hole or some area where free air can move across it and cool it while in use. Overheating should not be an issue normally, but if the board begins to behave erratically remove power, wait 2 minutes, and repower the board.

© 2009 Hyperdyne Labs

Power miser mode

The processor used on your saber sound board is state of the art and runs internally at over 100MHz. This amount of pure compute power can generate heat inside your hilt. In order to mitigate this, the processor is put into a power miser mode whenever the saber is inactive.

When the saber turns on and off, it is waking the processor up and putting it back to sleep. Because of this, your battery life will be extended 10x compared to if the processor was continually running.

The upshot to this method is that your sound board is only generating heat when it is active and playing out sounds. Once the saber plays out the powerdown sound, it goes back to sleep, thus saving battery life and reducing heat soak inside your hilt.

One drawback to this method is that you might hear a slight pop noise on the beginning of the ignition sound and at the end of the retraction sound. This is normal for this power miser mode. If you wish to rid of this pop, we can reprogram your board to continuous run – but this comes with a high power penalty.

Speaker selection

You can use any type speaker with the sound board, we recommend a 4-8 ohm speaker capable of handling at least 1W for best results. Smaller speakers may crackle if they receive too much power. Proper speaker selection also involves mounting it in your hilt – you want the hilt cavity to create a sound chamber which will increase the speaker's volume.

TIP: It is typically best to install the speaker in the lower part of the hilt and use the entire hilt tube as a resonating cavity.

© 2009 Hyperdyne Labs

EXAMPLE MOUNTING INSIDE HILT
(not to scale)

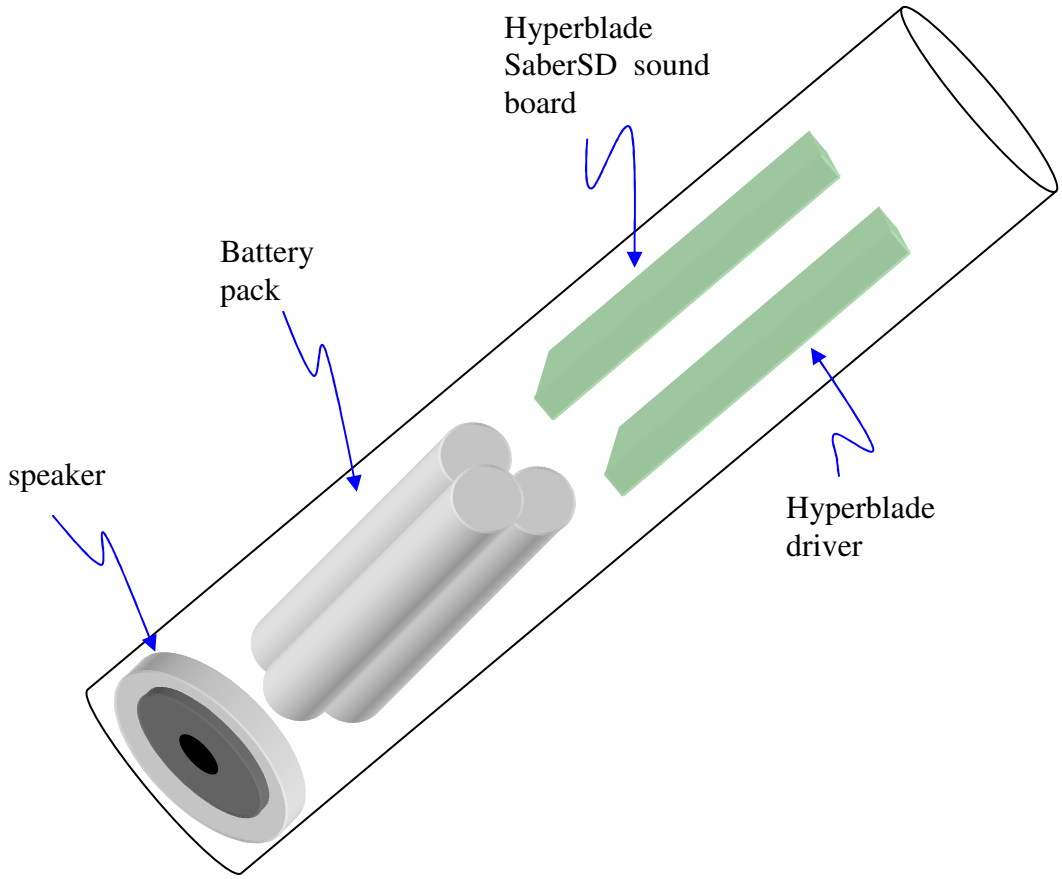

Electronic Specifications

Unit dimensions: 2" L x 1" W
Speaker: 1-1.4" diameter, 4-32 ohm,
Audio output power: 750mW-1W
Input voltage: 6-14V
Current consumption: 250mA when sound active, 20mA when sound inactive

NOTICE: There is no warranty on kits. It is your responsibility to install the board. Opened kits cannot be returned. Be careful if you use a battery source that is capable of delivering a lot of current. Contact a professional if you need assistance. Hyperdyne Labs assumes no responsibility for the misuse of this kit or any damage to your saber hilt due to improper installation. This guide is only one way to do the install and does not represent all methods. Use at your own risk!!