GB Integrated Pack Light and Sound Controller Board

INTEGRATED CONTROLLER KIT

This board controls all the lights for your proton pack and wand. It also controls an optional sound board (including our economy sound board).

This board controls the following lights on your pack:

- The gun bar graph (consisting of 16 red rectangular LEDs)
- The flickering barrel gun LEDs
- The static backlighting LEDs as seen in the gun body.
- The 14 power cell blue LEDs
- The 4 cyclotron red LEDs
- Controls external bright xenon or LED flash unit at start of gun firing

The kit includes the following parts, please check to make sure you have everything:

1) Assembled controller board
2) 1 long 1/8" pushbutton switch cable (for gun fire sound control)
3) 1 short 10-pin ribbon cable w/ 1 connector (for cyclotron lights)
4) 1 short 10-pin ribbon cable w/ 1 connector (for sound board interface)
5) 1 short 34-pin ribbon cable w/ 2 connectors (for power cell lights)
6) 1 long 10-pin ribbon cable w/ 1 connector (for vibration motor and flash)
7) 1 long 14-pin ribbon cable w/ 1 connector (for gun lights and vent switch)
8) 1 long 34-pin ribbon cable w/ 2 headers (for gun bargraph lights)
9) 2 white LEDs (vent and barrel lights)
10) 2 orange LEDs (static gun and barrel lights)
11) 1 yellow blink LED (gun light)
12) 1 red LED (gun light)
13) 4 red cyclotron LEDs
14) 14 blue power cell LEDs
15) 16 rectangular gun bargraph LEDs
16) 1 vent toggle switch
17) 1 vibration motor
18) (optional) power cell LED daughterboard

NOTICE: There is no warranty on kits!! It is your responsibility to install the board. Kits cannot be returned! This kit can consume a lot of current. Be careful if you plan to use a battery source that is capable of delivering a lot of current. Contact a professional if you need assistance. Hyperdyne Labs assumes no responsibility for the misuse of this kit.

Tools needed to complete the kit:

- wire cutters/strippers
- exacto knife (for splicing the ribbon cable)
- soldering iron (or glue)
- small screwdriver

Here is a picture of the assembled proton controller board:

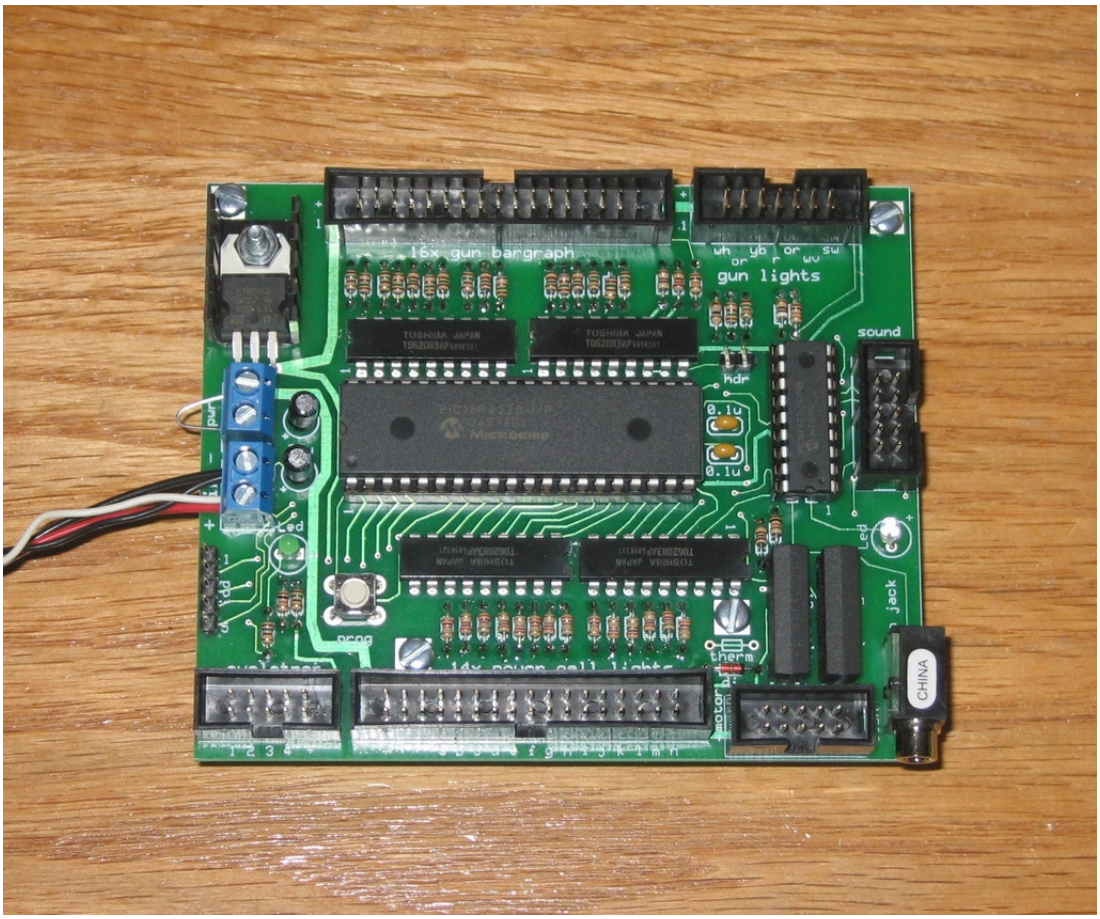

The headers on the board accept standard 0.1” dual row ribbon cables. Each header controls the specified lights.

The kit comes with 6 ribbon cables you will need to fully light up your pack and control an optional sound board.

The gun bargraph cable, gun static light cable, and the vib motor cable are all much longer than the others. This is so you can run these cables from the pack up through the gun tubing to light up the gun body, barrel, and bargraph area.

The 1/8” pushbutton cable is also long enough to run from the board up to the gun body to control the firing light effects and sound.

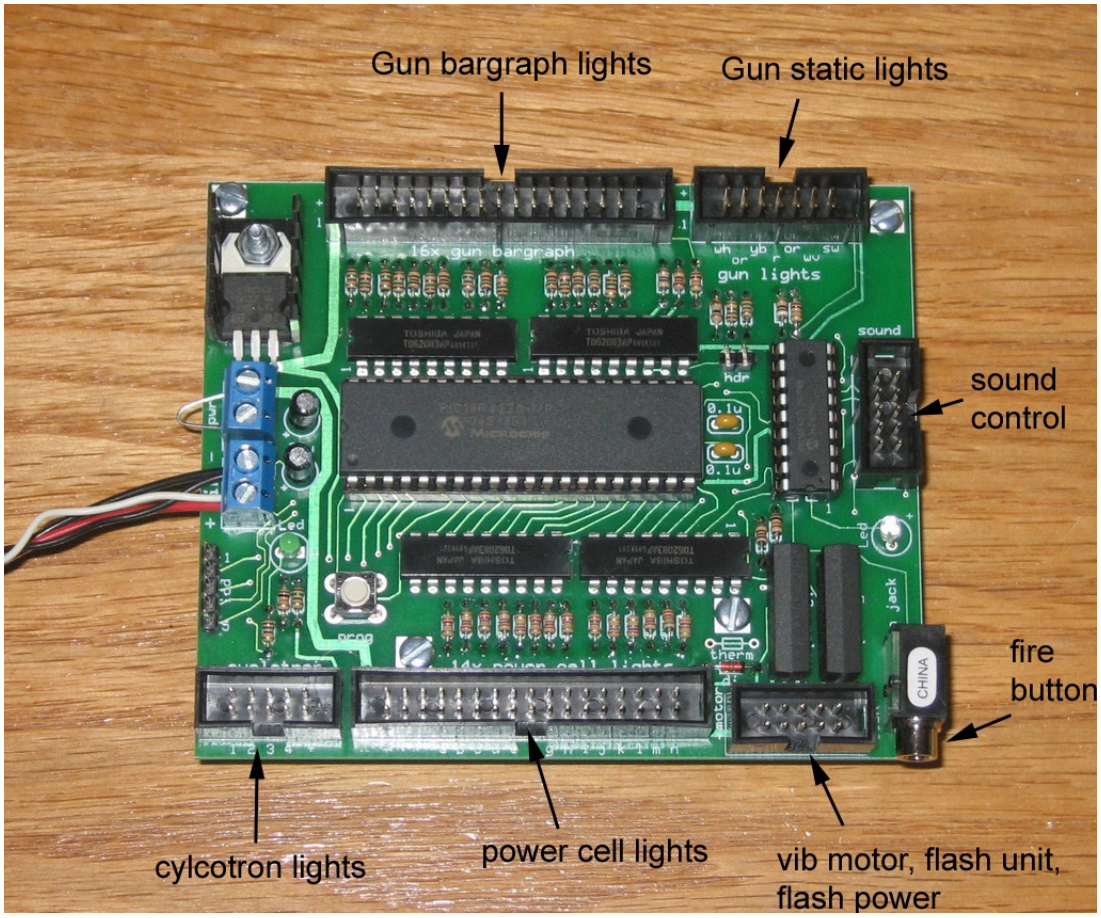

NOTE: The ribbon cables that are included in the kit are keyed, so they only insert into the socket one way.

POWER CONNECTIONS

You can connect a power source of 9V-12V to the controller board. A suitable power supply would be 6AA batteries, a 12V gel cell lead acid rechargeable battery, 8AA batteries, C or D cell batteries. The larger the battery the longer it will run on a single charge.

A rule of thumb: the bigger the batteries, the longer they will last. If your board starts acting funny or quits sequencing, check to make sure the batteries are good. Dead or old batteries will cause the board to act unpredictably. Make sure you check the battery polarity before hooking them up!

You can also connect up a master power switch to the board. This can be run to the pack or to the gun body to power on the entire pack. The power source and master power switch are connected via the 2 blue terminal blocks.

For convenience, you can use one of the functional toggle switches on the gun body as the master power switch. Simply screw in the wires as follows:

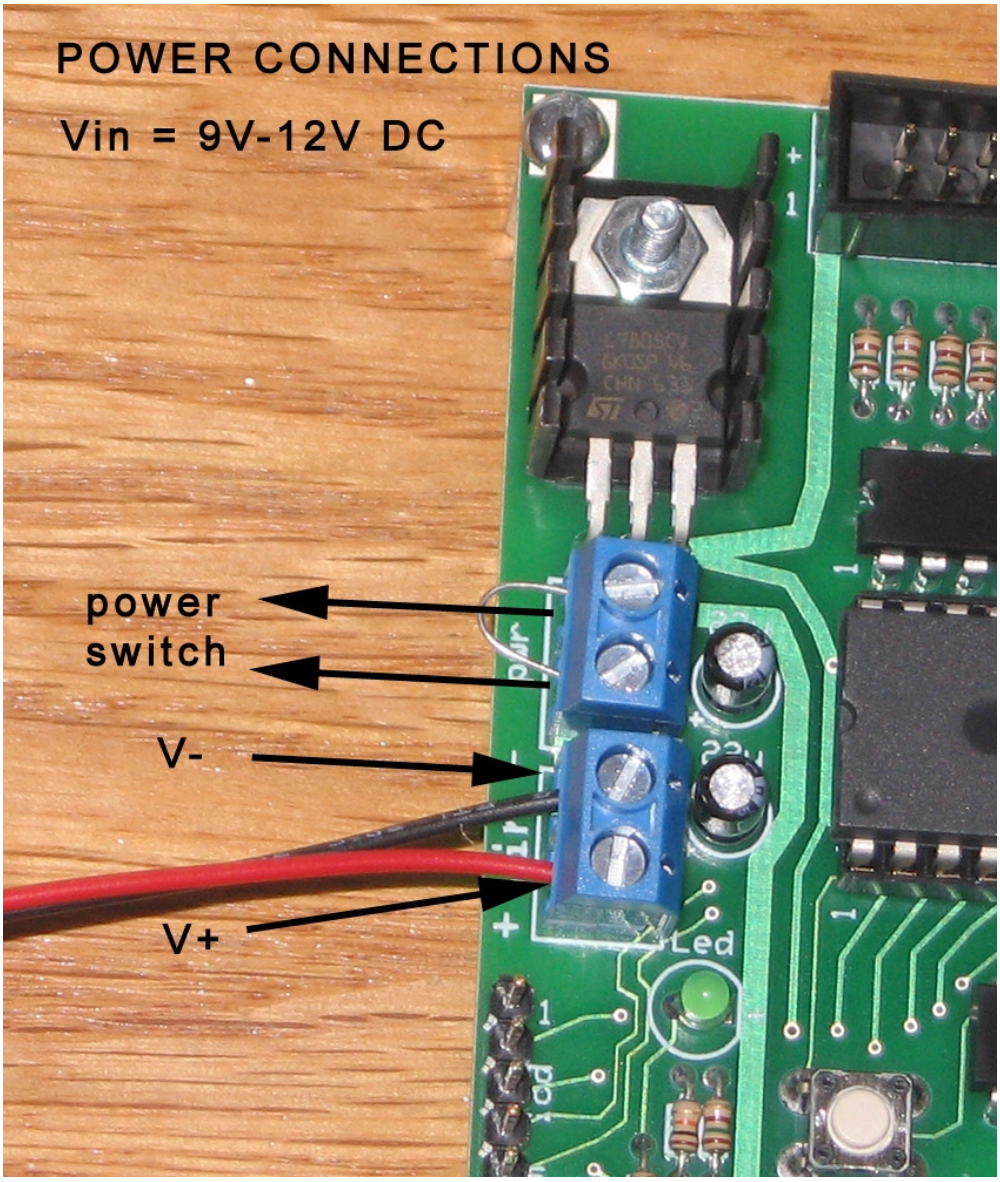

For the power switch, use at least 22-24 gauge wires. The same for the power switch wires. *Your controller board may have a piece of jumper wire shorting the power terminals. You can remove this and add your own switch wires, as this shorting lead was simply used to test the board after manufacturing.*

CONNECTING UP THE LIGHTS

Here are diagrams for every header for LED connections.

<u>Cyclotron lights:</u>

Here is the header for the cyclotron with pinouts labeled. You can see under the header there is a “1 2 3 4” list. This corresponds to the 1st, 2nd, 3rd, and 4th cyclo LED. The bottom row of pins are all positive (+), and the top row is negative (-).

The red cyclo LEDs come with one lead longer than the other. The longer lead is the positive side. It looks like:

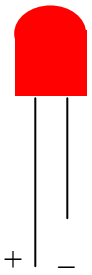

LED
polarity

To connect the cyclo LEDs, plug in your cable and follow the wiring diagram.

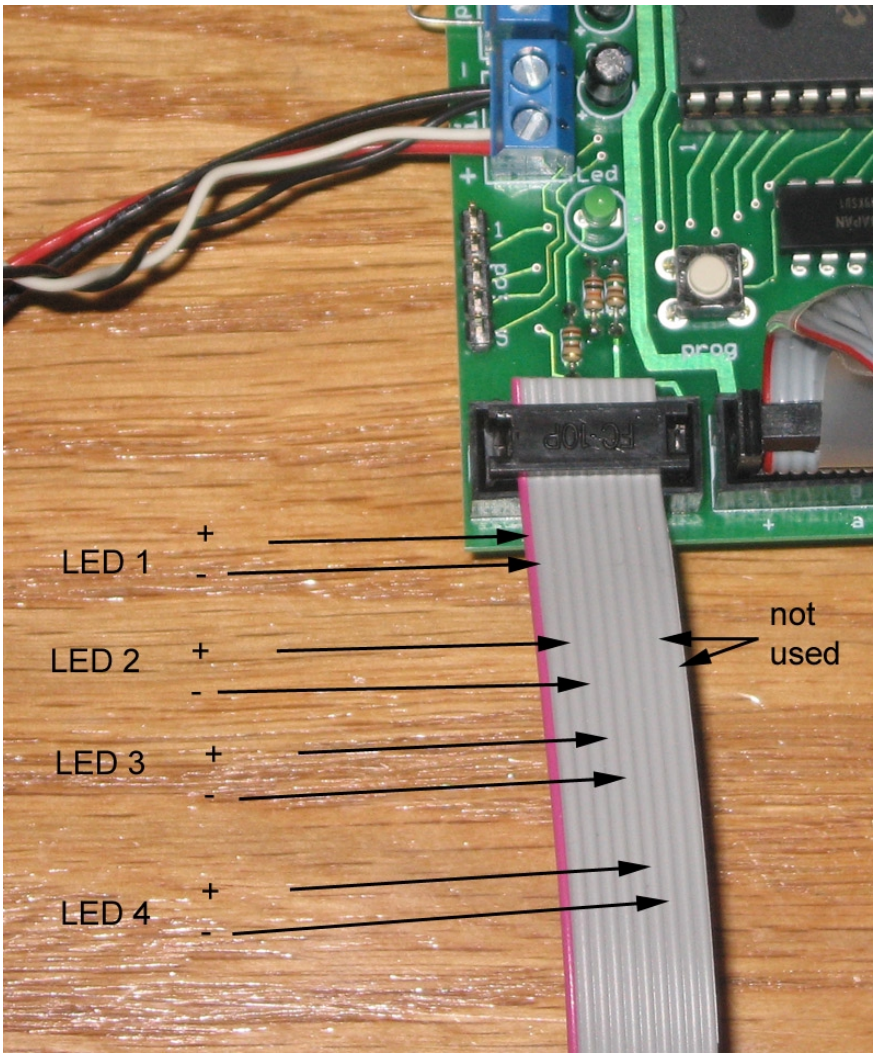

You can use an exacto knife to splice the wires and solder or attach the LEDs to the other end of the cable, observing the above polarity for the LEDs. NOTE: The red stripe denotes pin 1 on the ribbon cable.

When you have attached the LEDs it will resemble the following:

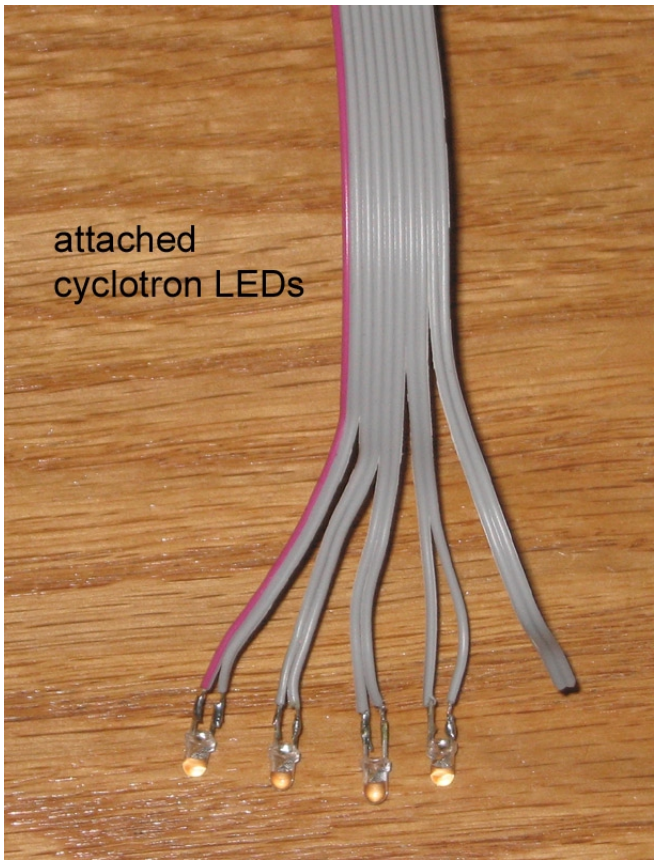

Power cell lights:

The 14 power cell blue LEDs connect to the 34-pin header next to the cyclotron. You will only use the rightmost 28 header pins for the LEDs, the leftmost 6 pins are unused on the ribbon cable.

The next pic shows the board connector for the power cell LEDs. The pins you will use are labeled “a”,”b”, “c”, up to “n”. The “a” LED is the lowest sequencing power cell LED, where “n” is the highest on the pack.

As with the cyclotron LED header, the bottom row of pins are all positive (+), and the top row is negative (-).

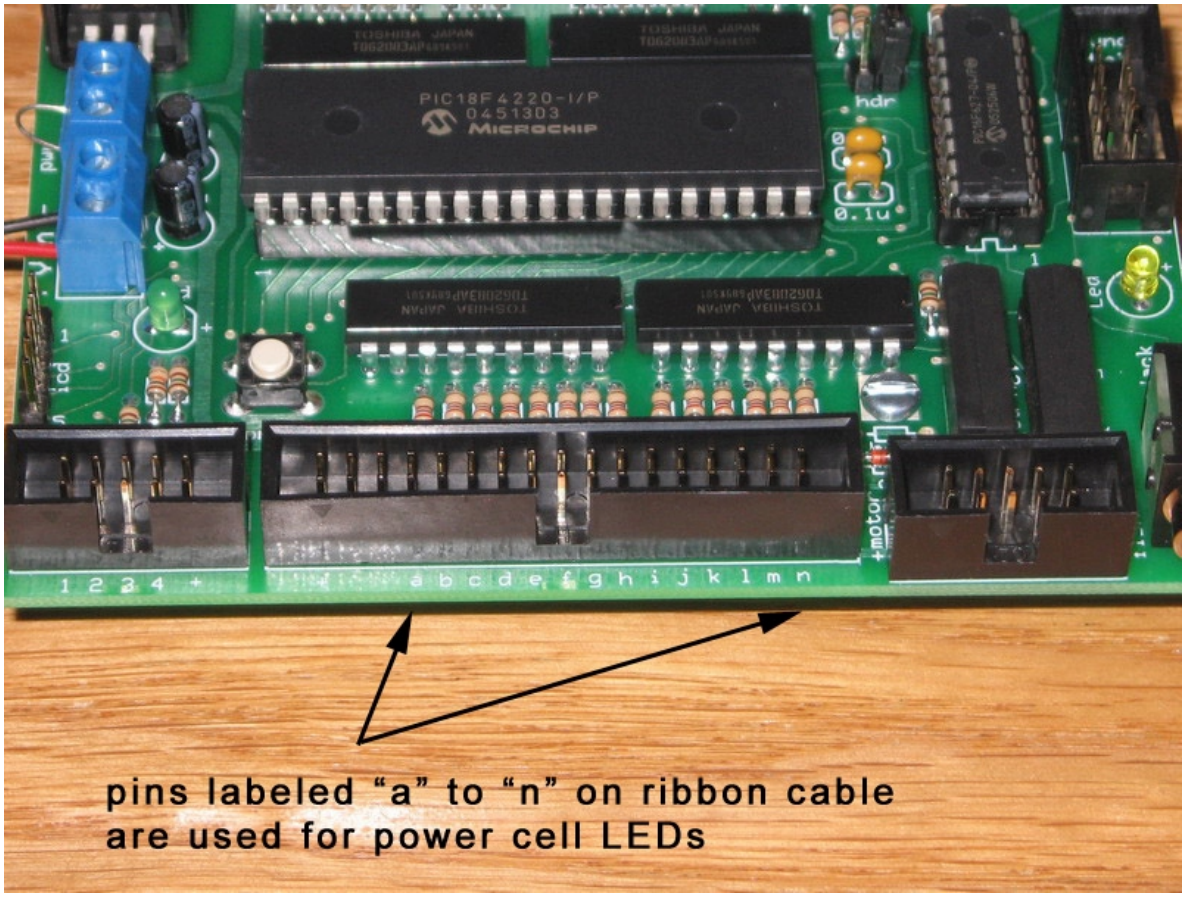

If you have bought our optional power cell daughtercard, all you have to do is plug in the ribbon cable to the controller board and do the same up to the daughtercard. That is it!

Here is a picture of the optional daughtercard:

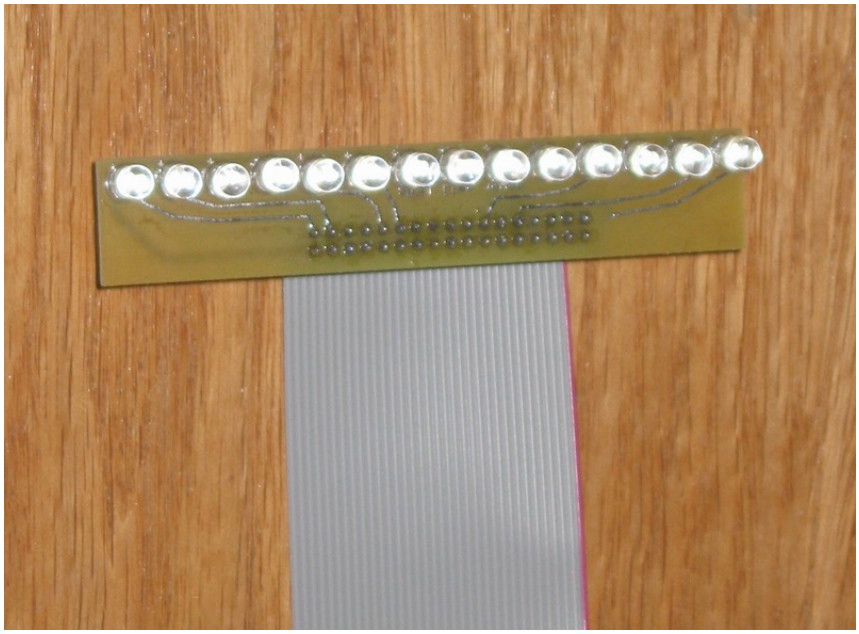

If you are not using our power cell daughtercard, you can simply install each LED into the connector on the free end of the ribbon cable. Simply push each LED into the corresponding connector holes. Here is a pic showing where the LEDs go:

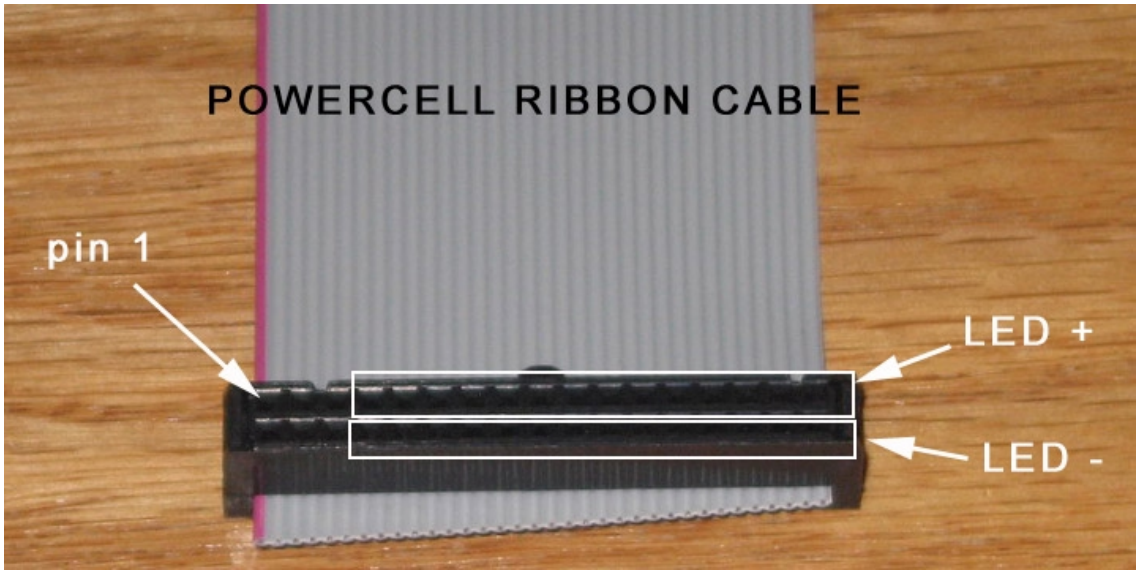

NOTE: For the blue power cell LEDs, the longer leg on the LED is the “+” side,

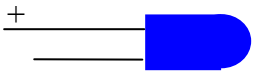

and the shorter leg is the “-“ side.

You can mount the LEDs in the ribbon connector directly. You will have to bend the LEDs to space them out if you are inserting them directly into the ribbon cable connector. Here is a quick install pic (you should take your time and bend the LEDs more uniform!) You can bend the LED legs using a pair of pliers. You can then also secure them to the connector with hot glue.

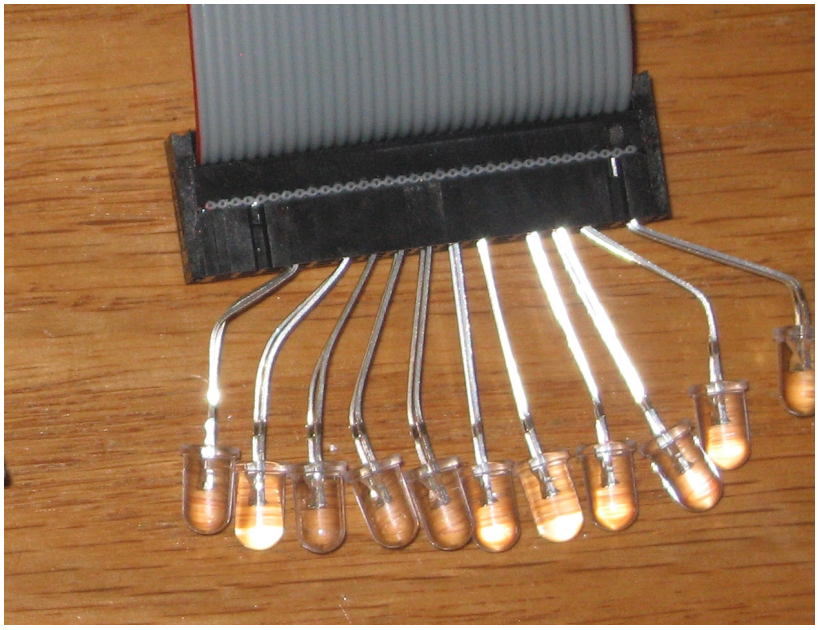

Gun wand barrel flashing LEDs and static wand LEDs:

There are 6 gun LEDs and one vent switch that get connected to the 14-pin header.

You can see abbreviations for each LED that goes on the header pins. Here is a pic of the connections:

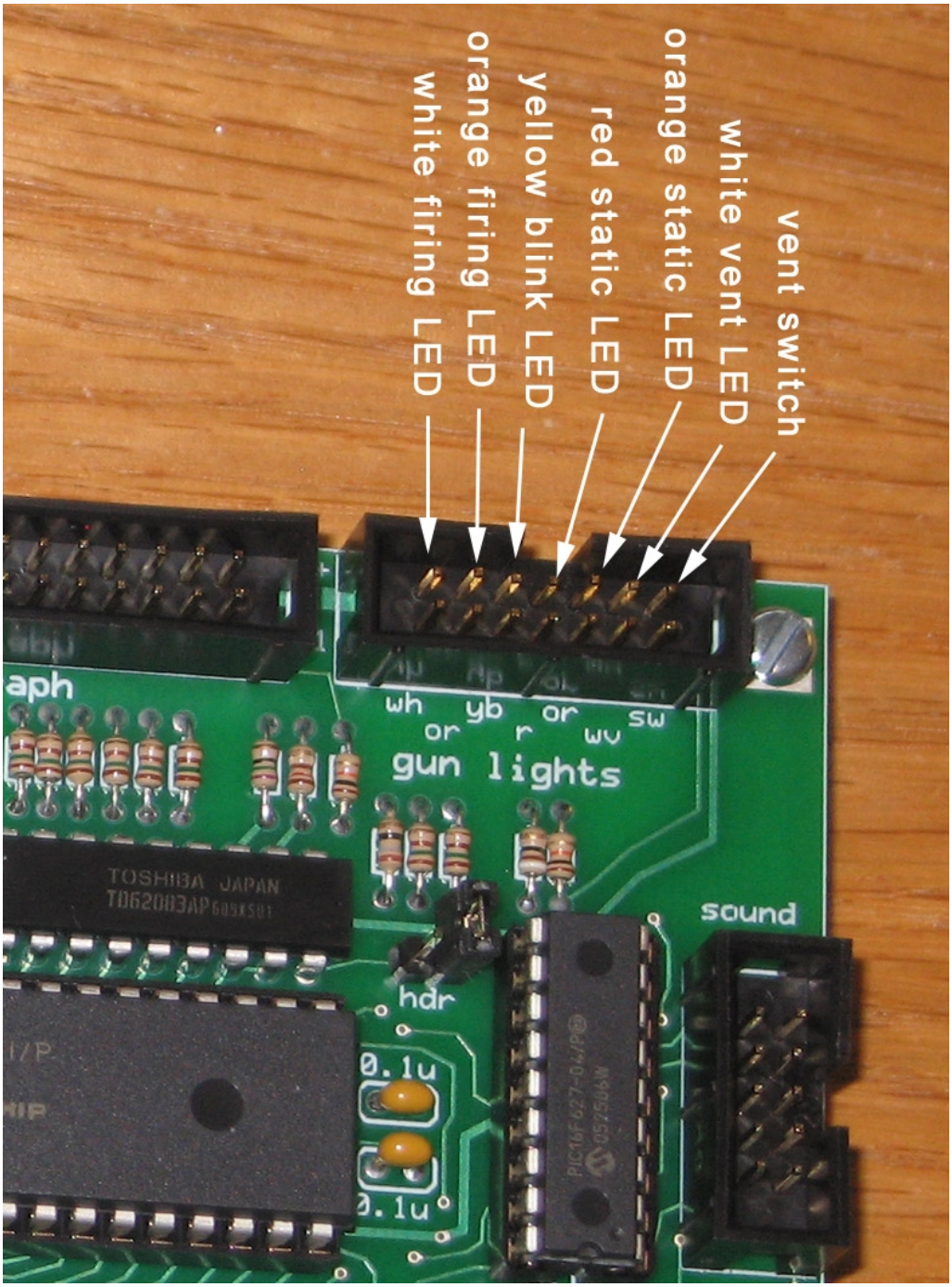

The white and orange barrel firing LEDs can be mounted in the gun tip, as they will flicker when the firing sequence is activated.

The next 4 LEDs are static wand LEDs:

1) yellow blinking LED
2) Static red “SLO-BLO” LED
3) Orange static gun LED
4) White gun vent LED

The last LED is the white vent light that resides underneath the grating on the gun top. The last header connections are for the vent switch. You can connect these wires to a standard toggle switch on your gun body. When you flip the switch the vent LED will light up, and the power on pack sound will also play out (when using the optional sound board).

Here is an annotated pic of the ribbon hookup you will need to do:

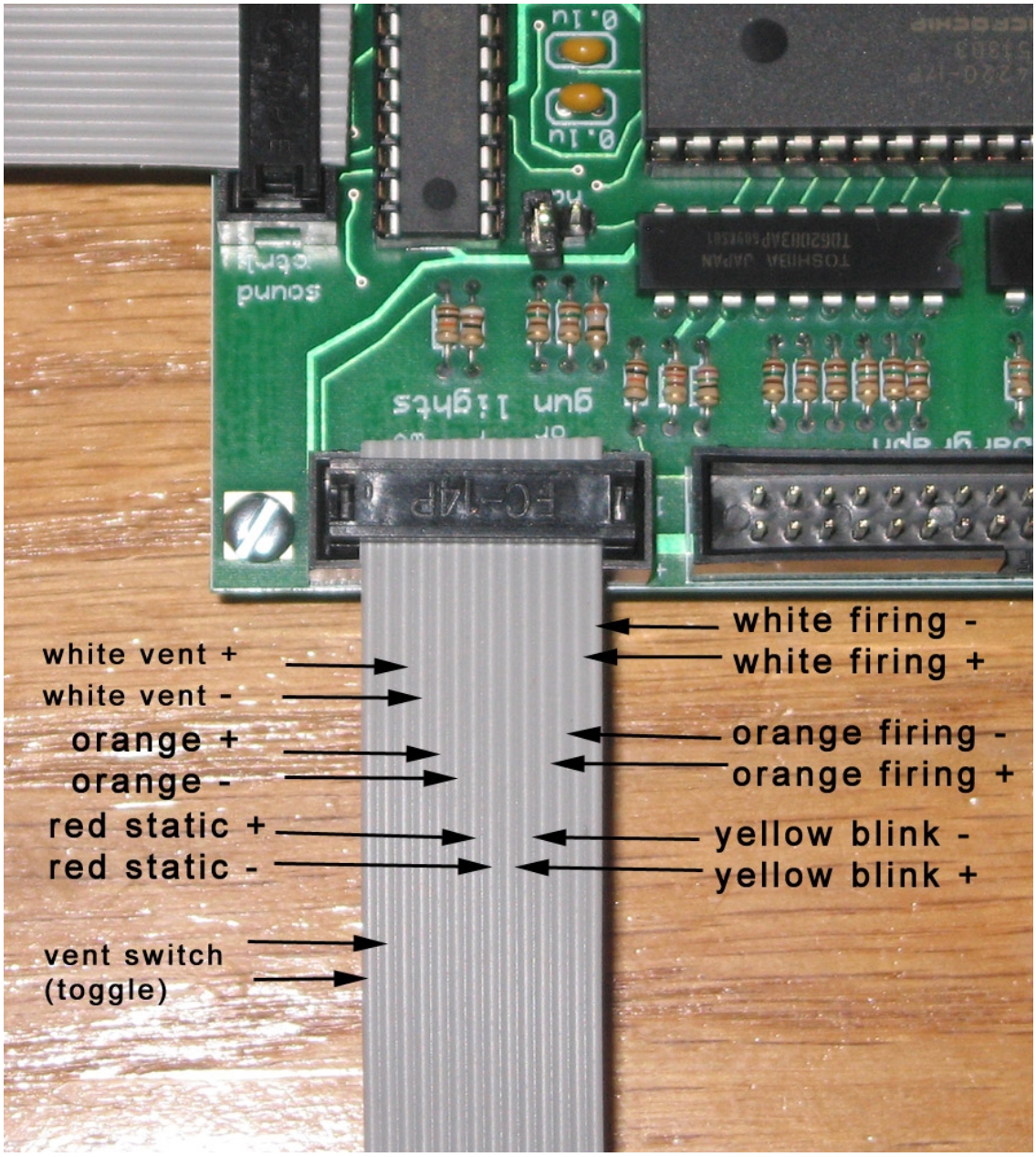

Here is a picture of the static gun LEDs installed inside a wand body:

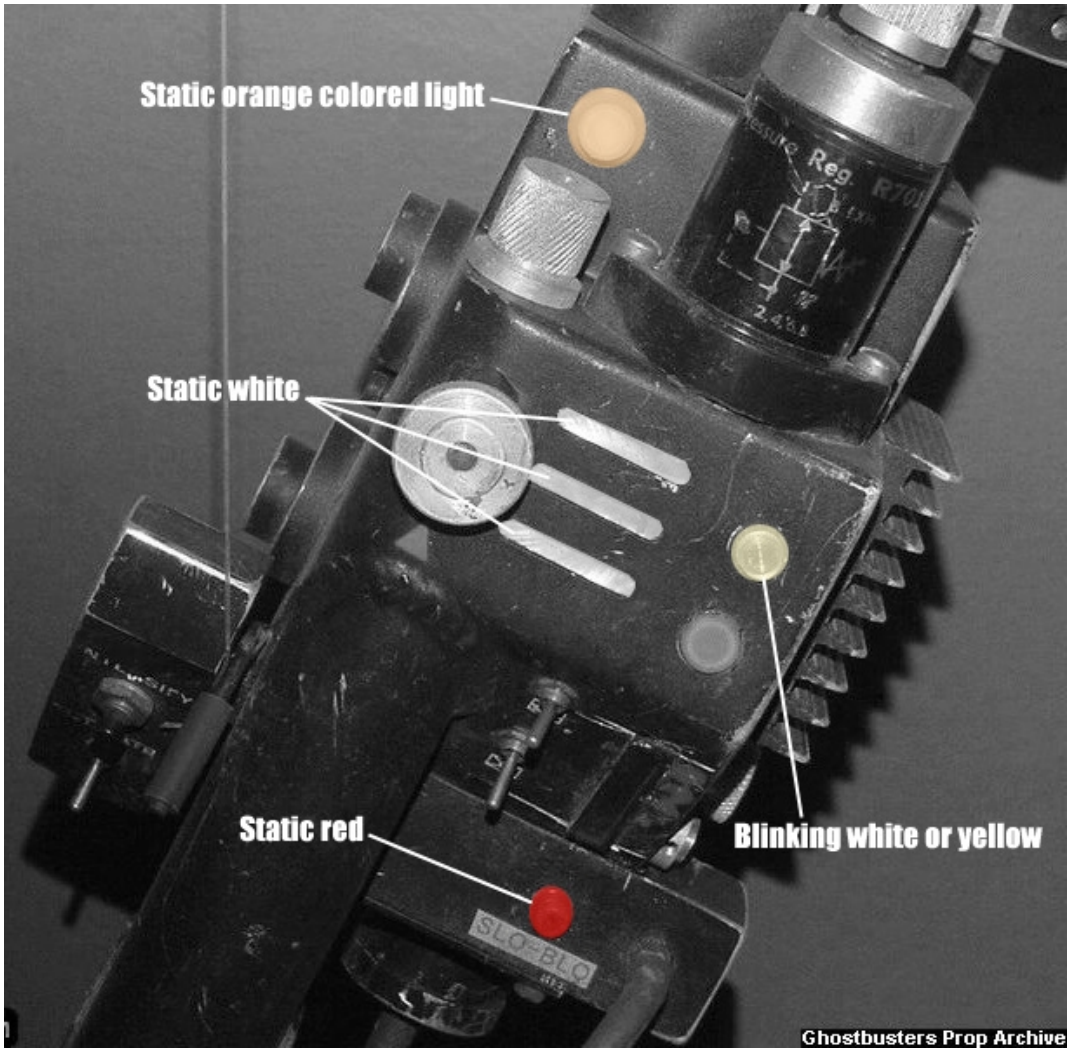

Wand bargraph LEDs:

The 16 wand bargraph LEDs hook up to the other 34-pin header. The included ribbon cable is long enough to run from the pack up the gun tubing and into the gun body.

Plug the ribbon cable into the gun bargraph header. The red pin 1 stripe will be on the left side of the cable as shown next.

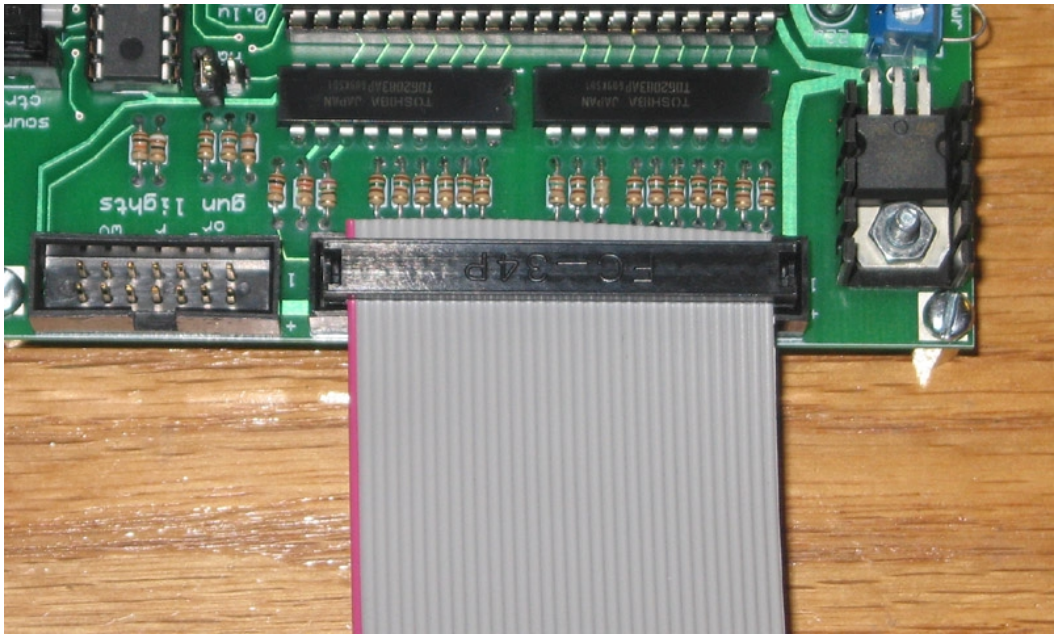

To install the bargraph LEDs, just plug them into the other female connector end on the ribbon cable. Note the polarity, if you don't connect them up correctly they will not light up. In this case just turn the LED around.

Here is a picture of the bargraph LED connections:

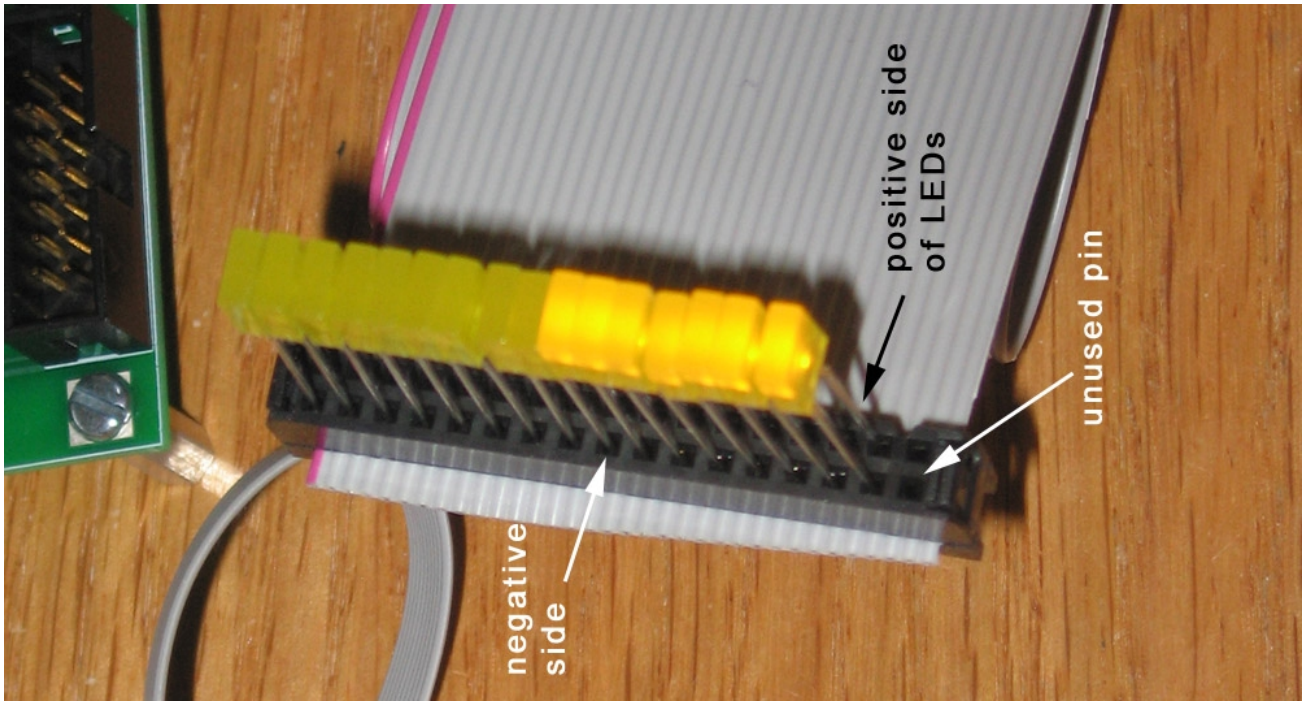

You can see which row the positive side of the LEDs go into. The bottom 2 pins (farthest from the stripe) are unused. The LED closest to the red stripe is the top of the bargraph.

Also note the bottom 2 bargraph LEDs are always on. The top 14 will sequence up and down.

NOTE: You can also trim the leads on the bargraph LEDs and then reinstall them into the connector to make them shorter. This is useful if you don't have enough vertical space to mount the LEDs in the gun body. Don't trim them too short, start by cutting off half the lead, reinstall, then check to see that they still make good connection (and light up).

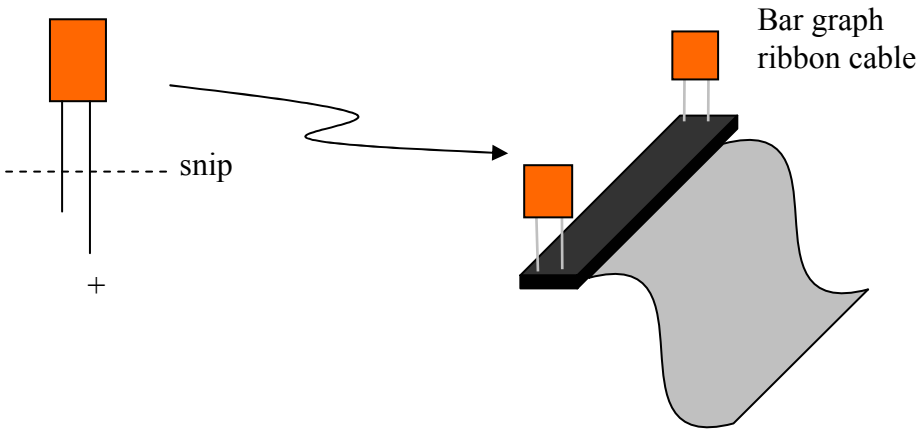

Here is a picture of all the LEDs installed in a gun body (pic courtesy playskool)::

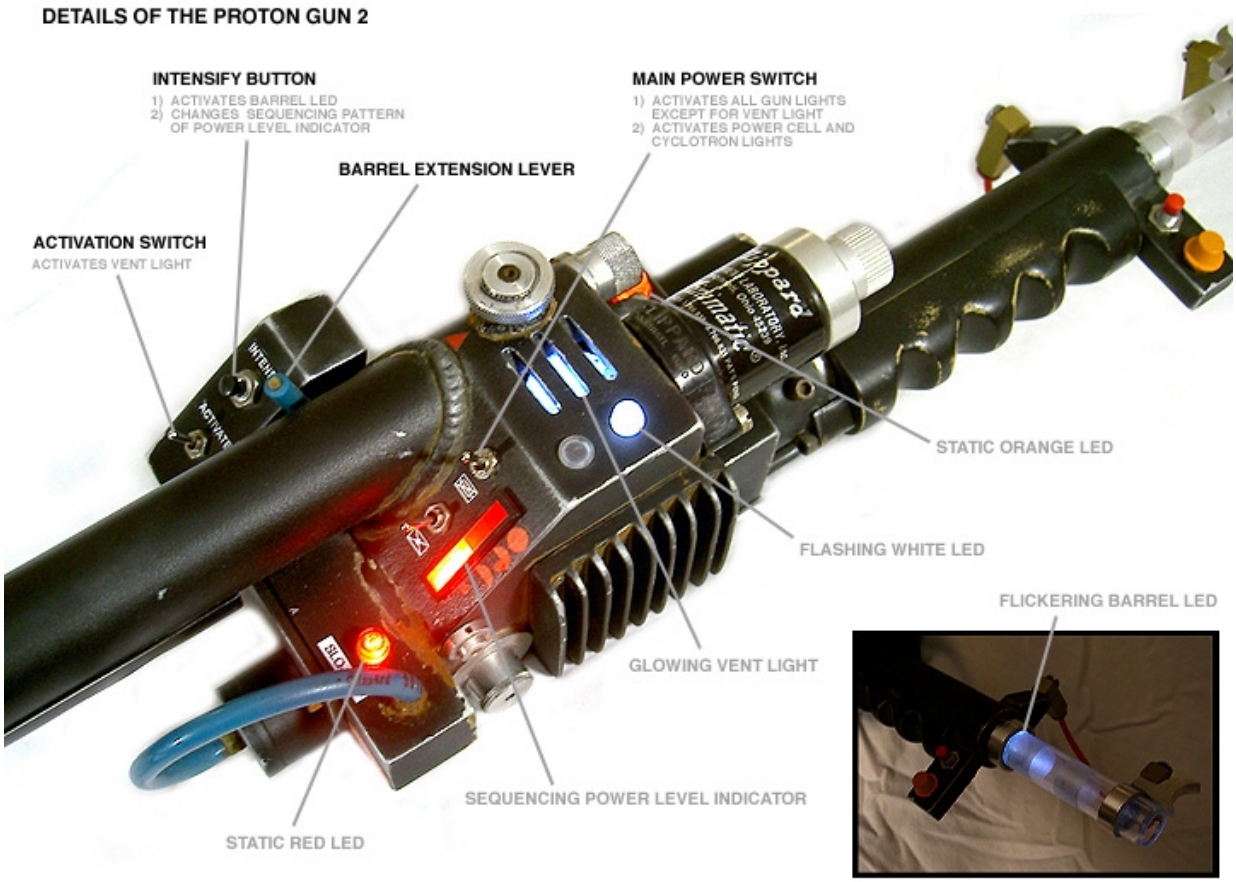

VIBRATION MOTOR / OPTIONAL FLASH HOOKUP

The next connector on the board is for the wand/pack vibration motor, the optional flash power relay to control an external flash unit on/off, and the flash firing relay that remotely fires an external flash unit. Note that the flash unit is not included in the package, you have to provide your own. The connectors allow you to hook up practically any light source that is under 1A of current draw.

The ribbon cable is long enough to run the vib motor up to the wand, but you can mount it in the wand or the pack, whichever you choose.

Here is a pic of the header with pinouts:

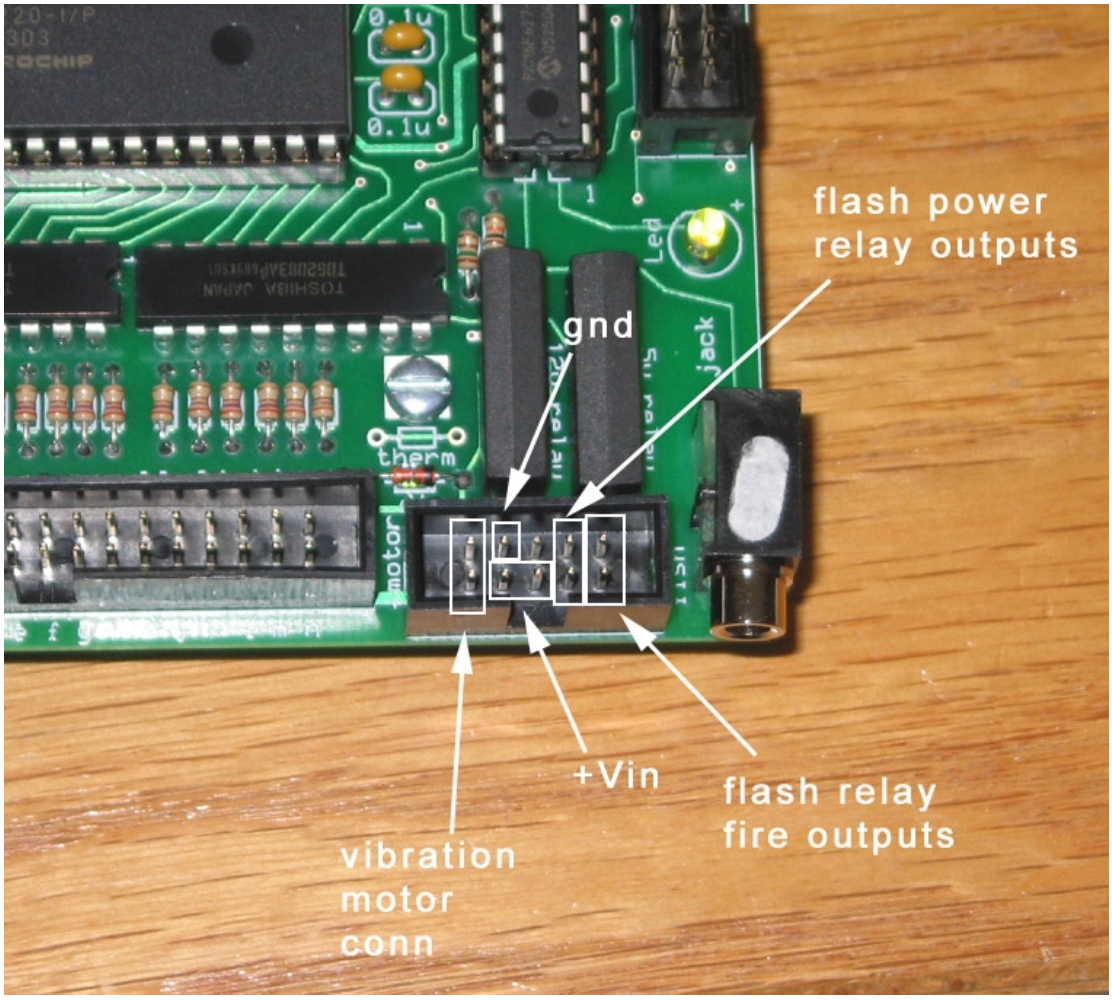

The vibration motor connections attach to the + and – ends of the vib motor.

The flash relay power outputs are for an external flash unit that you wish to trigger when the gun lights start firing. If you are using something like a disposable camera flash unit or a xenon flasher kit (that has its own battery supply), then the power relay outputs can be connected inline to that kit's positive

power wires. This will automatically turn power on and off to the flash kit so its battery does not run out when the pack is not being used.

You can also have the controller board supply +Vin power to your flash kit by connecting the kit up to +Vin and GND pins, as shown above. In this setup the controller board supplies power to the flash unit (it can be LEDs, xenon, etc).

The flash relay fire outputs are for triggering your external flash unit. You can connect these wires inline to your trigger line, or across a manual pushbutton on a flash unit. The controller board will automatically trigger these relay outputs at the appropriate time to synchronize the flash with the sounds and gun lights.

Here is a pic of the ribbon wires annotated:

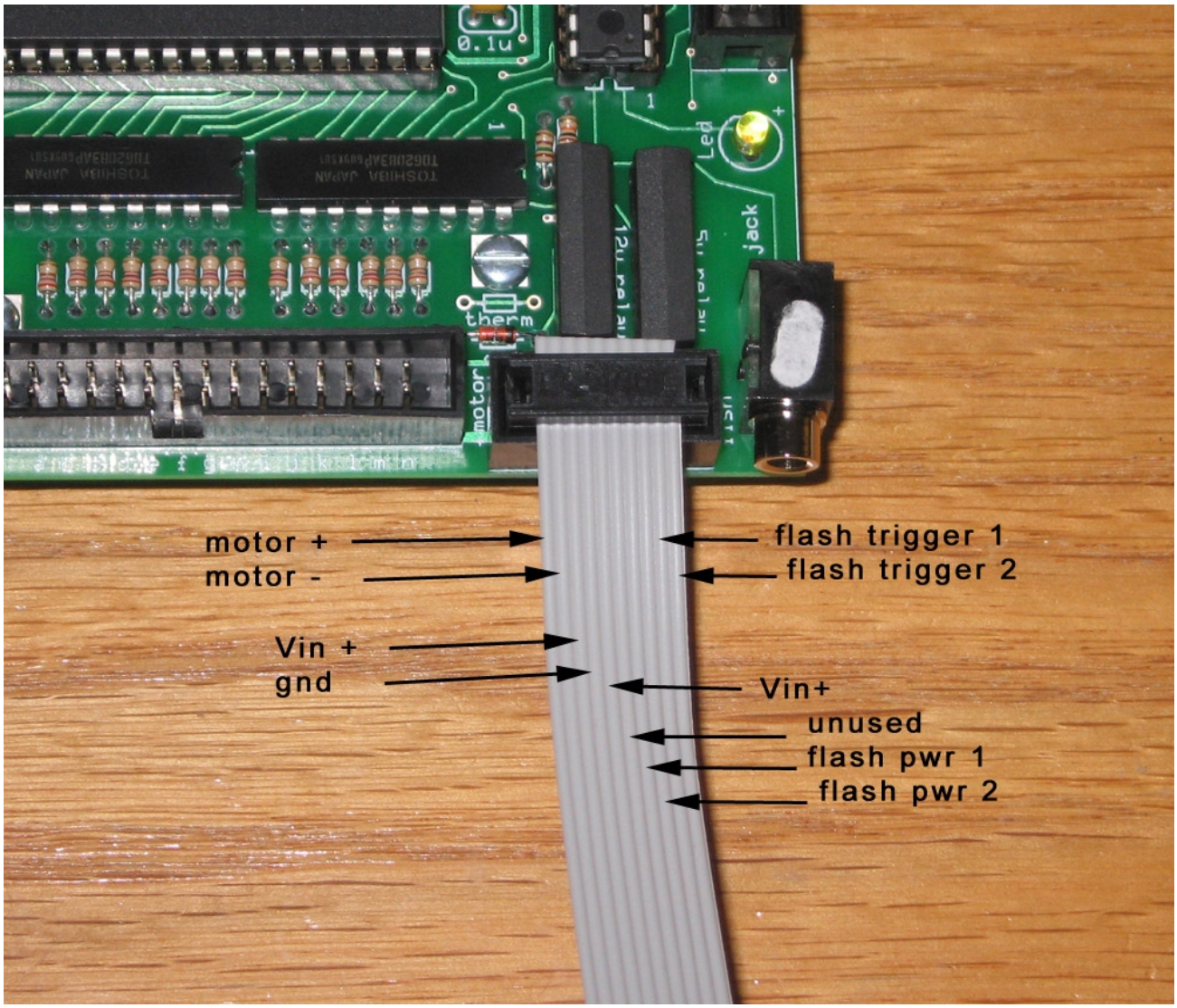

Here are wiring diagrams if you want to connect an external flash unit (such as a xenon flasher kit or an LED cluster) to the flash relays. The ribbon wires labeled above that you need to connect up are shown in the diagrams below.

Controlling a flash unit or xenon flasher kit with the controller board

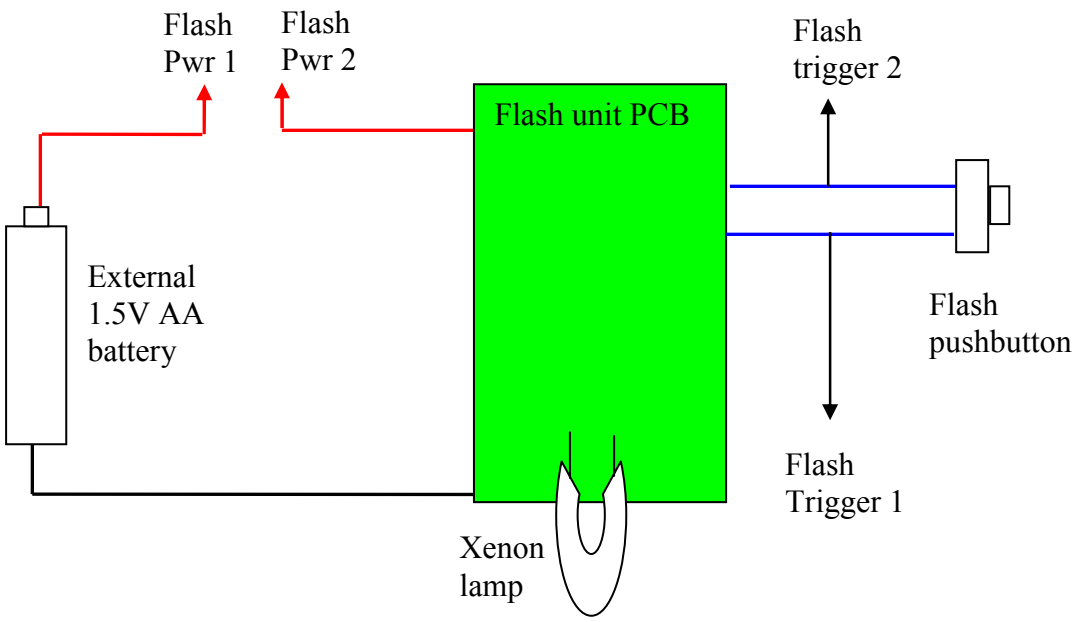

WARNING: Be careful handling any flash or xenon kit. The components on those boards can generate high voltages that can seriously injure you. Contact a professional before modifying or hooking up a flasher kit to the controller board. Hyperdyne Labs assumes no liability if you choose to hook up a high-voltage flash source.

Controlling an LED cluster or Luxeon LED flash module with the controller board

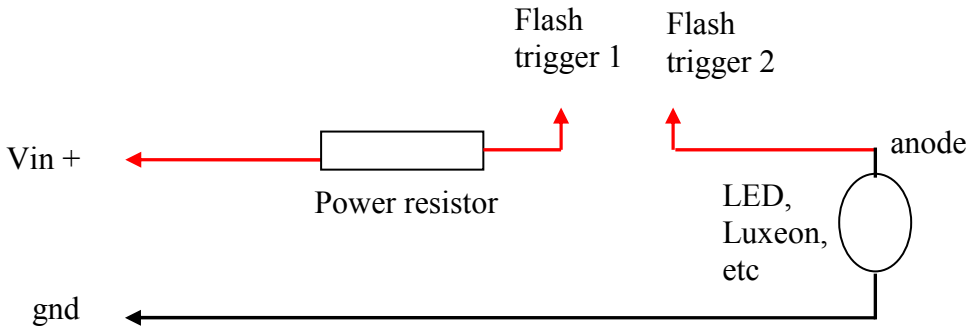

NOTE: You must calculate the proper resistor value and power rating depending on the LED(s) you are using for the flash circuit. Use the equation R = (Vin – Vf)/ I_led. Vf is the forward voltage of the LED and I_led is the operating current of the LED. Make sure you use a resistor with the proper rated power for the LED.

NOTE: Do not connect any source to either the ***Flash trigger*** pins or the ***Flash power*** pins that requires more than 1A of continuous current. Plus if you plan to use an external xenon flash unit with its own battery connected through the Flash power pins, you might need to wire a thermistor inline with these pins to avoid relay latchup. Any capacitive load on the flash power or trigger pins can potentially damage the relay.

INTEGRATED SOUND BOARD INTERFACE

The integrated controller board will also seamlessly control an optional sound board, such as our ***GB economy sound module***. With this setup, the sounds are automatically synchronized with the light effects to give your pack the most realistic functionality!

The 10-pin sound board header on the controller board will connect all the necessary control lines for the sound board. If you are connecting common power from the controller board to the sound module, please refer to the power wiring diagrams below to do this properly.

<u>Connections:</u>

Here is a diagram of our economy sound board module.

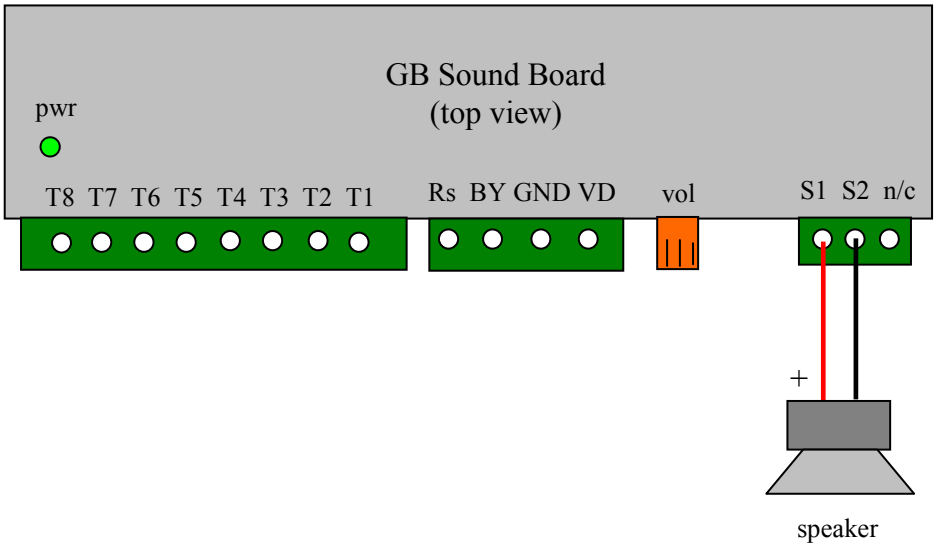

The sound board has screw terminals to connect the ribbon wires. Simply splice the ribbon cable wires with an exacto knife, then strip them to expose the wire. Screw them into the corresponding terminals.

The connections you need to make from the controller board to the sound board are the **T1-T8** and the **Rs** terminals. You can also run common power from the controller board by wiring in **GND** and **VD** wires (shown next).

Here is a pic of the ribbon cable attachments for the sound board:

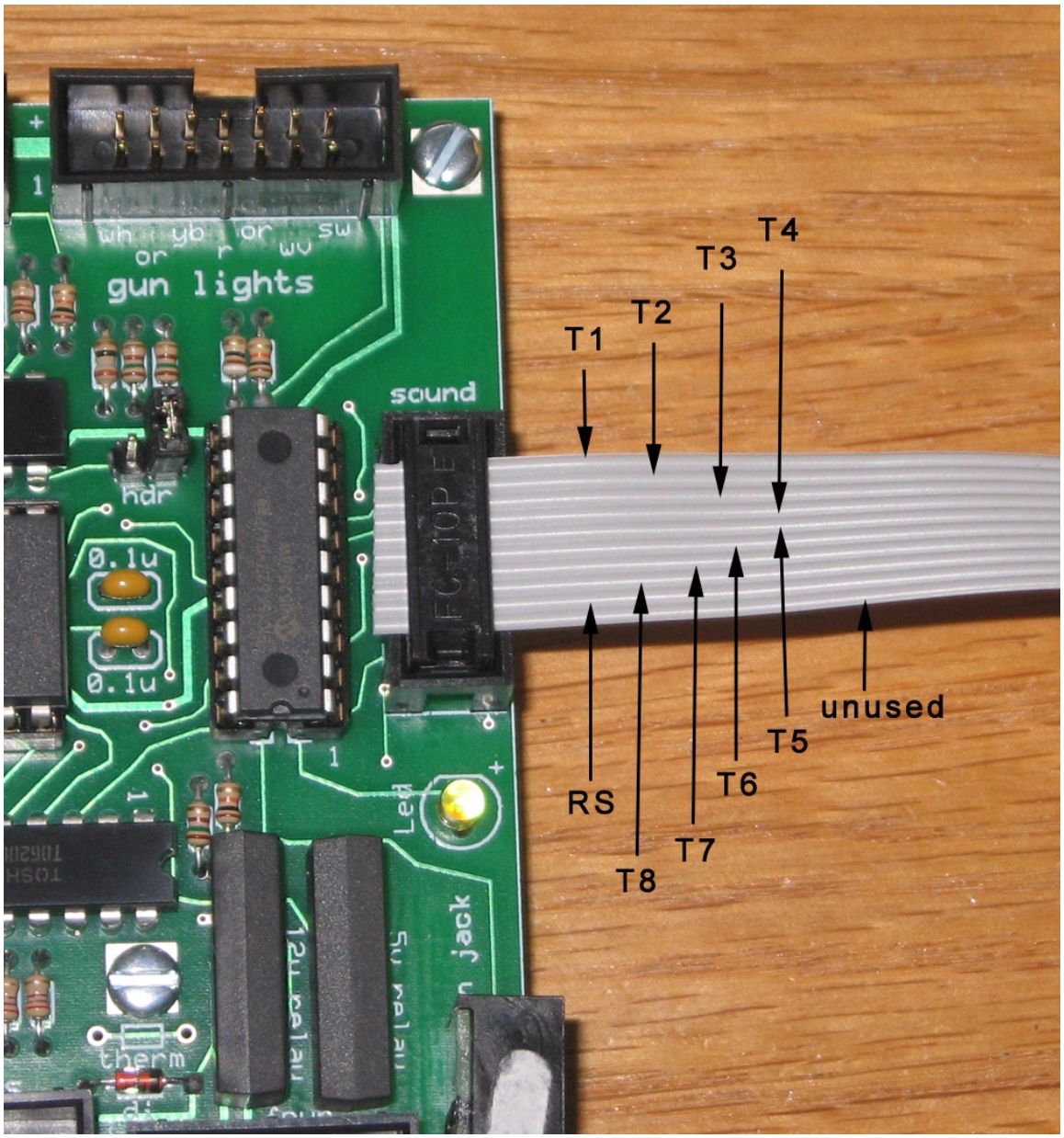

If you want to run common power to the sound board from the controller board, then you can run 2 wires from the VD and GND sound board terminals to the following terminals on the controller board:

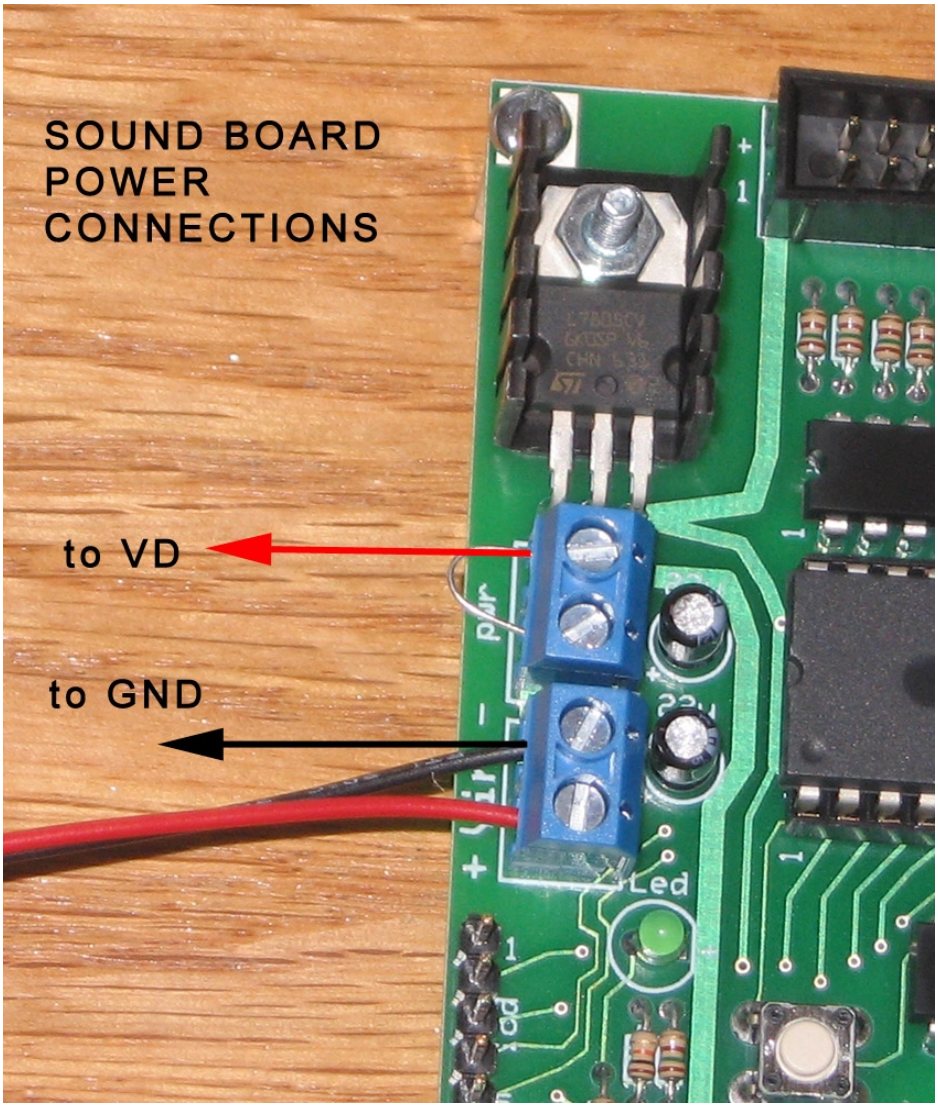

Now with these connections, the master power switch for the controller board will power on the pack lights and the sound board at the same time!

NOTES:

The 1/8” jack next to the sound cable is where you plug in the remote pushbutton cable. You can run the cable up to the gun and use the “INTENSIFY” pushbutton to control the firing sounds and other sounds on the pack (when using one of our sound modules). This button also controls the firing wand lights and other features. So it is necessary you use this button cable as the master fire switch. Our sound module documentation goes over the operation of the optional GB sound board.

The LED next to the sound interface cable will blink every 5 sec to let you know the sound interface chip is operating properly. If the LED is not blinking then you have a problem.

The jumper pins next to the sound board interface select which sound board you are using with the board. If you do not jumper those 2 pins, the sound chip

assumes you are using our GB economy sound board. Jumpering these 2 pins is restricted for future sound board support. The LED will blink 2x every 5 sec. when you have the GB economy board selected (pins not jumpered), or it will blink 3x every 5 sec if you have the pins jumpered with the black shunt (for future sound board support).

When you press the remote firing pushbutton, this LED will also light up as long as the firing button is depressed. This is an easy way to tell if your pushbutton and cable is making good contact. If you press the firing button and this LED does not light, then you have a problem with either your firing pushbutton or the cable itself.

CONTROLLER BOARD OPERATION AND FEATURES

Once you have connected up all the LEDs, you can hook up your power supply and begin playing with the numerous features of the board!

The small programming mode pushbutton mounted on the board controls all the different lighting effects. You can select the different lighting modes by pressing the pushbutton a desired number of times. The controller board will respond by echoing back the number of presses you entered by blinking the green programming LED this many times.

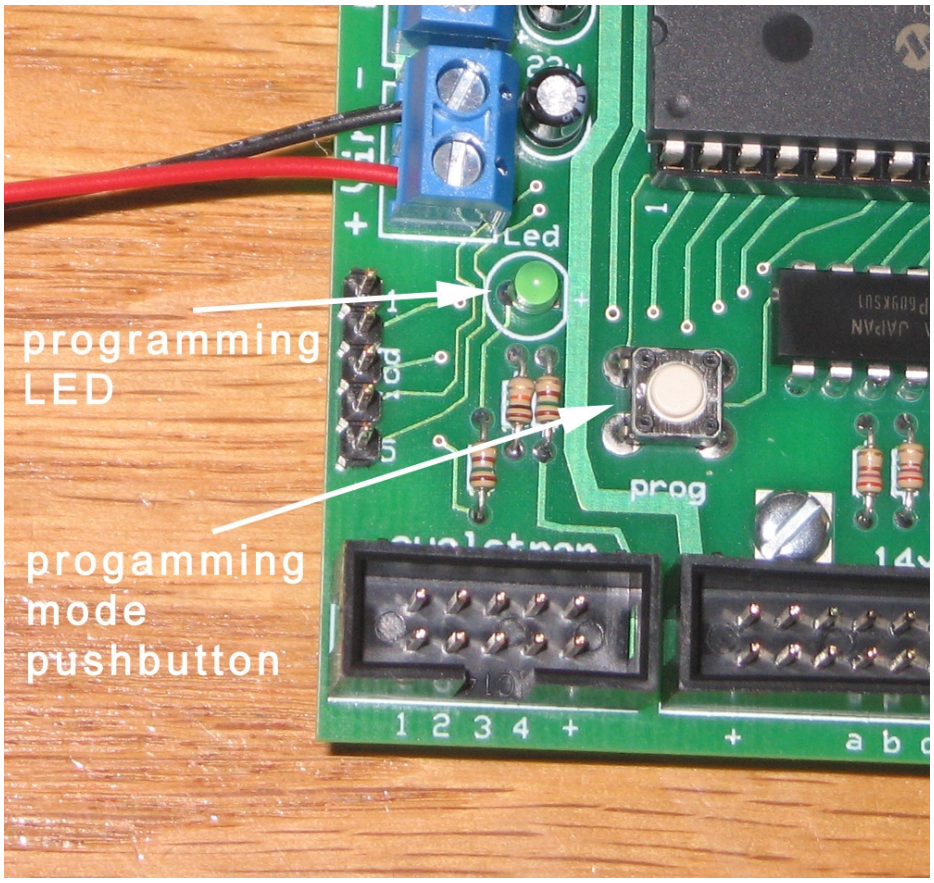

Below is a table showing the different modes. For light modes with more than one setting, each time you access that mode the setting will be increased. When you reach the max setting, the next mode access will cycle back to the lowest value.

Number of button presses	Mode selected	Number of possible settings	Setting values	Default setting value
1	Increases power cell LED sequencing rate	10	1 = slowest, 10 = fastest	7
2	Increases cyclotron LED sequencing rate	10	1 = slowest, 10 = fastest	5
3	Selects gun bargraph normal sequencing mode	5	1 = up/down 2 = up 100% / down 80% 3 = up 80% / down 100% 4 = up 80% / down 80% 5 = random blink	1
4	Selects gun bargraph firing mode	2	1 = wig wag sequence 2 = power bar sequence	1
5	Increases timing for gun power bar countdown rate	7	1 = fastest countdown, 7 = slowest countdown	1
6	Sets the pack operational light sequencing mode	2	1 = movie mode (pack lights operate independent of gun) 2 = theoretical mode (pack lights are linked with the gun firing sound)	1
7	NA	NA	NA	NA
8	Resets all parameters back to defaults	NA	NA	NA

The settings are electrically stored on the board, so once you enter them the board will remember each time you power it on. If you want to reset all the settings back to their factory defaults, you can do this by pressing the button 8 times.

Here is a description of all the different pack modes:

Power cell sequencing rate:

Pressing the button 1x increases the normal sequencing rate of the power cell LEDs. After you get to the highest setting, the next press goes back to the lowest and continues. This is useful if you want to custom set the sequencing rate of the power cell block. Default value is 28ms per LED, which gives a sequence rate of .03*14 = 420ms for the entire power cell.

Settings are as follows: 50ms/LED, 45ms/LED, 42ms/LED, 40ms/LED, 38ms/LED, 35ms/LED, 30ms/LED (default), 28ms/LED, 25ms/LED, 20ms/LED.

Cyclotron sequencing rate:

Pressing the button 2x increases the sequencing rate of the cyclotron LEDs. After you get to the highest setting, the next press goes back to the lowest and continues. This is useful if you want to custom set the sequencing rate of the cyclotron. Default is 250ms/LED.

Settings are as follows: 700ms/LED, 600ms/LED, 500ms/LED, 400 ms/LED, 300ms/LED, 250ms/LED (default), 200ms/LED, 175ms/LED, 150ms/LED, 100ms/LED

Bargraph normal sequencing mode:

Pressing the button 3x selects the type of sequencing the gun bargraph does while not firing.

Setting 1: bargraph LEDs go up all the way and down all the way (default).

Setting 2: bargraph LEDs go up 100% and down 80%

Setting 3: bargraph LEDs go up 80% and down 100%

Setting 4: bargraph LEDs go up 80% and down 80%

Setting 5: bargraph LEDs blink randomly

Bargraph firing mode:

The bargraph takes on a different mode when you are firing the wand. This novel concept also gives your pack a more realistic effect.

Setting 1: The bargraph LEDs do a “wig-wag” sequence when you are firing the wand. This sequence continues until you stop firing the wand.

Setting 2: The bargraph LEDs emulate a “power bar” that extinguishes over time. When you stop firing the wand, the power bar LEDs recharge in the background. This gives you the effect of a gun “charge” that you have to maintain. If the power bar gets down to the last bar when you are firing the wand, the last bargraph LED will start blinking. This tells you the gun has exhausted all power. The wand barrel firing LEDs will also start to “sputter” when this happens, giving you a more realistic effect that the pack has exhausted all its available power.

NOTE: If you are using our sound module, the firing sound will then change over to a sputtering gun sound, further enhancing this novel effect!!

Once you are done firing, the bargraph goes back to its normal sequencing mode. But the power cell charges over time, increasing every 1.5sec. So the longer you wait before firing the wand again, the higher the power bar will have recharged.

Using this feature with below theoretical pack operational mode enabled really gives you a pack that comes alive the more you use it!

Power bar countdown rate:

If you have the power bar mode selected for the gun bargraph, then pressing the button 5x will allow you to change the time it takes the power bar to extinguish. There are 7 settings, the default gives 500ms per bargraph LED, resulting in the power bar extinguishing all LEDs after 14*0.5 = 7sec of continuous firing.

Settings from low to high are as follows: 500ms/LED (default), 750ms/LED, 1000ms/LED, 1250ms/LED, 1500ms/LED, 1750ms/LED, 2000ms/LED.

Pack operational mode:

This controller board offers a novel concept never before seen in a pack light kit. It allows you to link the sequencing of the pack power cell, cyclotron, and gun bargraph lights together with the firing sound on the pack.

In movie mode, the power cell LEDs and the cyclotron LEDs sequence at their normal rate, independent of anything else. This is the typically setting seen in most proton packs with separate lighting kits (including the movie packs) – (default mode).

In theoretical mode, the power cell and the cyclotron LEDs will begin to increase their sequencing rate the longer the wand is fired. Once you begin firing the wand, these LEDs on the pack slowly start to increase their rate and end with them sequencing very fast. This gives the added effect of your pack generator spinning up as you emulate firing the pack. When you let go of the fire button, these LEDs start to slow down their sequencing over time. They eventually sequence back to their normal rate. This feature gives your pack the effect of synchronizing the pack lighting with the gun lights while firing – emulating what a "theoretical" pack might do if one existed!

LED heartbeat:

The green programming LED next to the onboard pushbutton will blink every 5 seconds, which allows you to tell if the controller board is operating ok. The LED will blink 1x if the movie mode is selected or 2x if the theoretical pack mode is selected. This heartbeat gives you an easy way to tell which operational pack mode the board is currently selected.